集成电路原理与设计
差分放大器

谭志超
zhichaotan@zju.edu.cn

Outline

- Single-Ended and Differential Ended
- Basic Differential Pair
- Common-Mode Response
- Differential Pair with MOS Loads
- Differential Pair with Active Current Mirrors

Outline

- Single-Ended and Differential Ended
- Basic Differential Pair
- Common-Mode Response
- Differential Pair with MOS Loads
- Differential Pair with Active Current Mirrors

Single-Ended vs. Differential Operation

- Single-ended signal: reference voltage is a **FIXED** value
- Difference signal: the difference input is defined as the difference of the two input nodes
  - **The two input signals have equal amplitude and opposite phase**

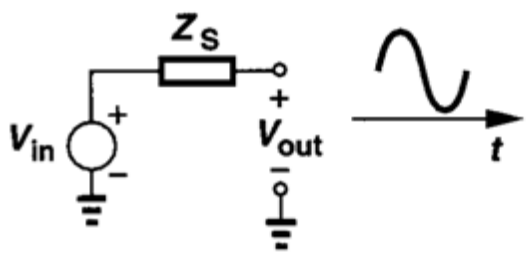

(a)

Single-ended

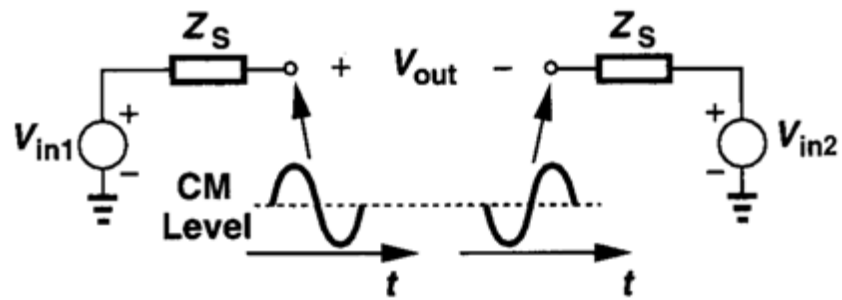

(b)

Differential signals

Single-Ended vs. Differential Operation

☐ Advantages of Differential Operation

- Increase maximum voltage swings

Peak-to-peak swing: **$2V_0$ vs. $4V_0$**

$V_0\cos\omega t$

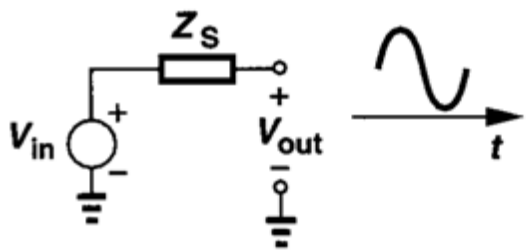

(a)

Single-ended

$V_X - V_Y = 2V_0\cos\omega t$

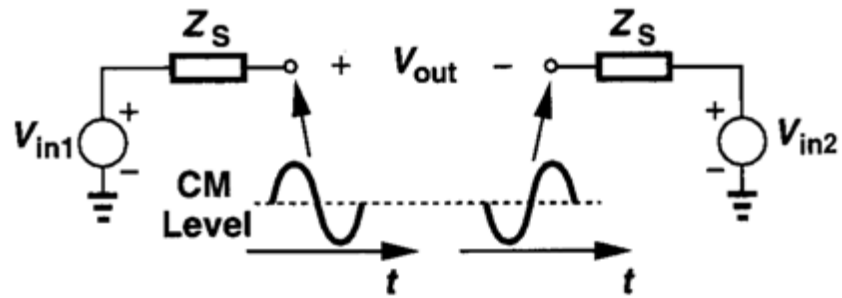

(b)

Differential signals

$V_0\cos\omega t + V_{CM}$ — $V_0\cos\omega t + V_{CM}$

Single-Ended vs. Differential Operation

☐ Reduction of coupling by differential operation

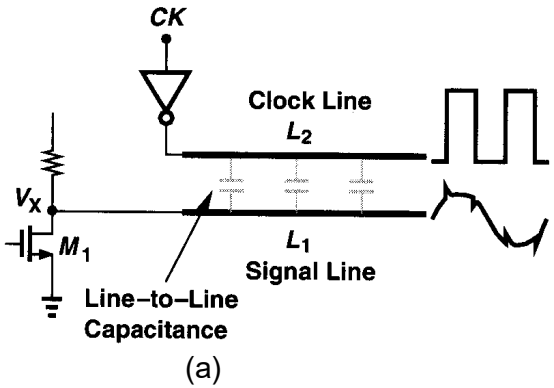

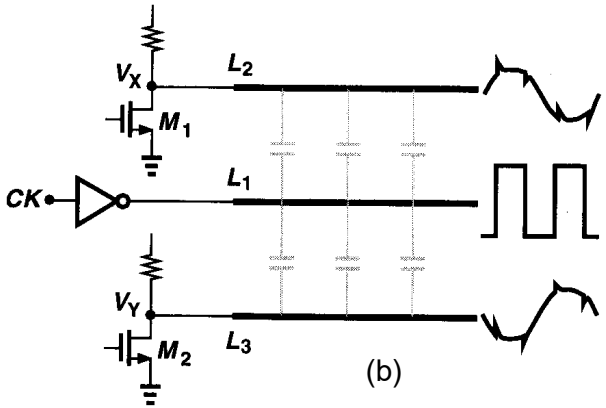

Corruption of a signal due to coupling; reduction of coupling by differential operation

☐ Reduction of coupled noise by differential operation

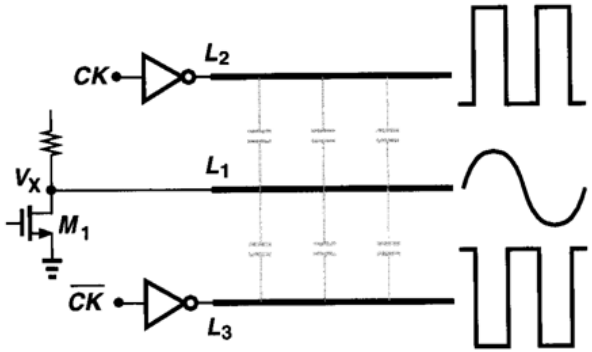

Reduction of coupled noise by differential operation

Single-Ended vs. Differential Operation

- Rejection of supply noise

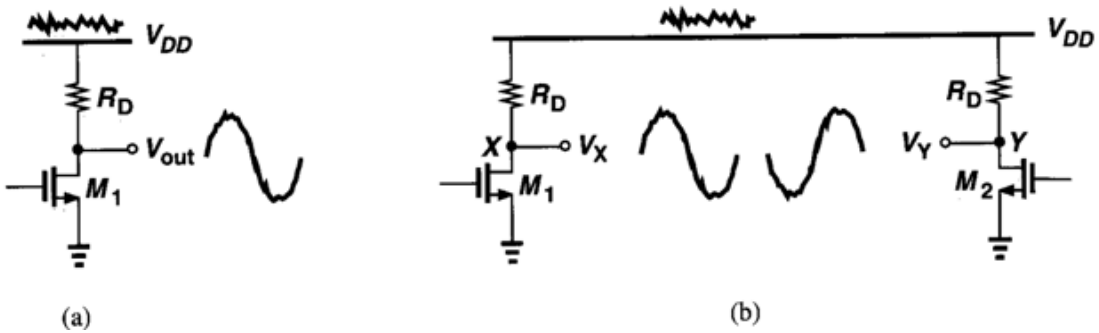

Effect of supply noise on (a) a single-ended circuit, (b) a differential circuit

- Differential input could increase the voltage swing

The maximum output swing at X or Y is $V_{DD} - (V_{GS} - V_{TH})$

$V_X - V_Y$: the peak-to-peak swing is $2[V_{DD} - (V_{GS} - V_{TH})]$

- Differential amplifier is easy to bias
  - Only one tail current is needed to bias the differential amplifier

Single-Ended vs. Differential Operation

- Differential signals have higher linearity
  - With odd symmetry input output characteristics, differential signal derived differential circuit possesses no even harmonics, and much smaller distortion than single-ended circuit.
- Differential circuits consume larger area
  - Since the single input transistor in single-ended circuit is replaced by transistor pair in differential circuit, **more die area** is needed for differential circuit to realize the same gain with the single-ended circuit.
  - **But single-ended circuit may cost more area to achieve the same performance, such as linearity, nonideality inhibition with differential circuit**

Pros and Cons of Differential Amplifier

- Pros: Improved ambience and power supply interference suppression ability; Increased voltage swing; Simple bias circuit; High linearity
- Cons: Increased area consumption

  (It is not a disadvantage when considering the differential circuit's high performance)

Trade-off

$V_0\cos\omega t$

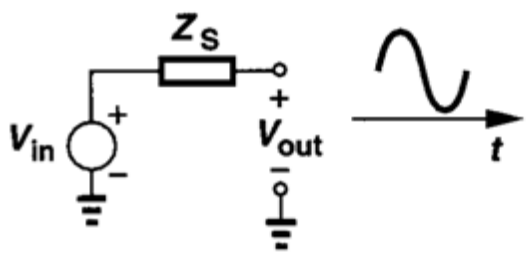

(a)

$V_X - V_Y = 2V_0\cos\omega t$

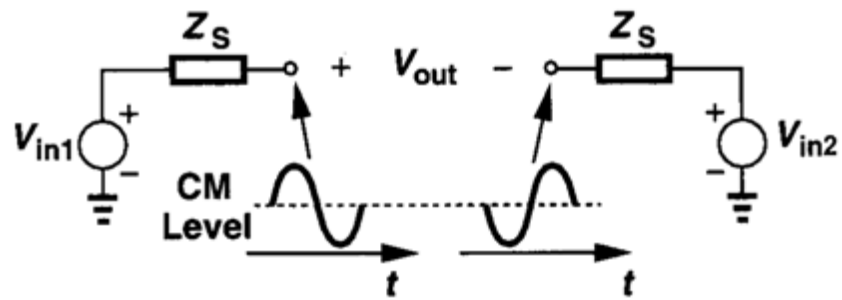

(b)

The differential amplifier is among the most important circuit inventions!

Outline

- Single-Ended and Differential Ended
- Basic Differential Pair
- Common-Mode Response
- Differential Pair with MOS Loads
- Differential Pair with Active Current Mirrors

Simple Differential Pair

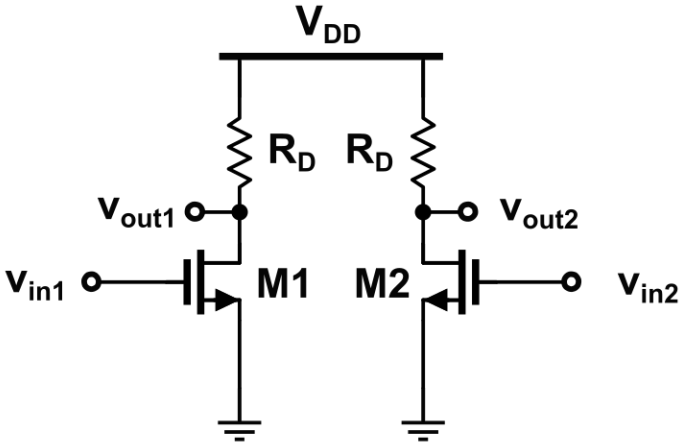

$$g_m = \sqrt{2\mu_n C_{OX} \frac{W}{L} I_D}$$

$$A_v = -g_m R_D$$

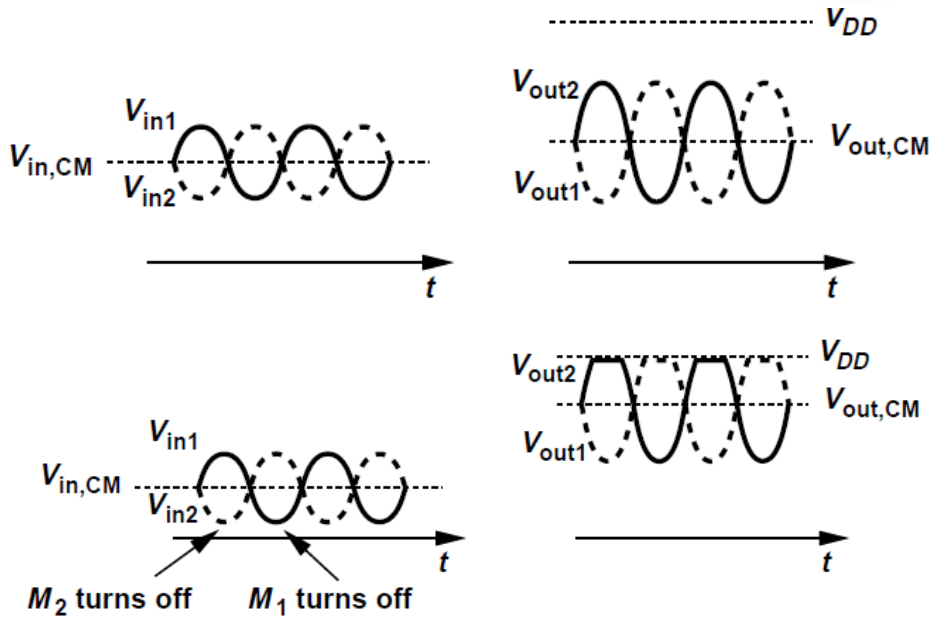

- $V_{in,CM}$ -> the bias currents -> g_m and the output CM level
- Problem: if $V_{in,CM}$ is excessively low, the minimum values of V_{in1} and V_{in2} may turn off M_1 and M_2, leading to severe **clipping** at the output
- Modification: Bias currents of the devices should have minimal dependence on the input CM level => **tail current source I_{SS}**

Basic Differential Pair

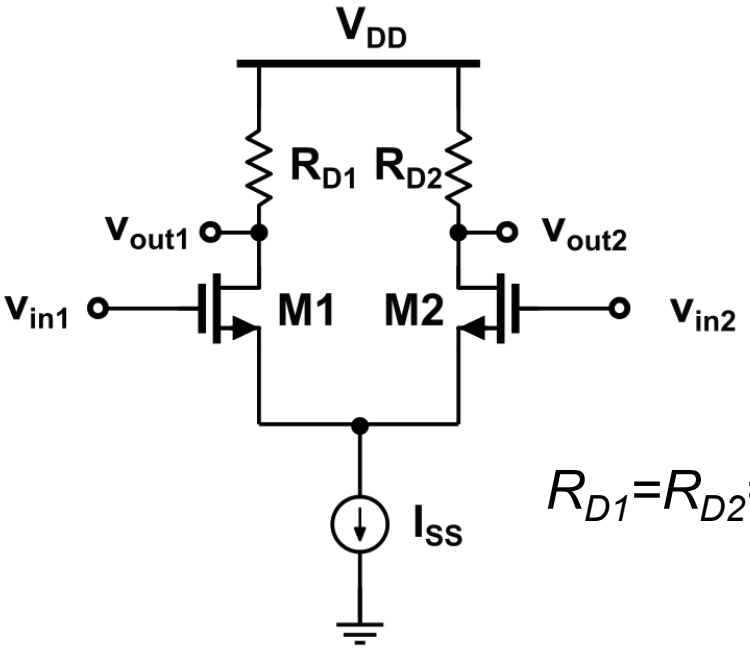

$R_{D1}=R_{D2}=R_D$

"Source Pair" ***"Long-tailed Pair"***

I_{SS}: be independent of $V_{in,CM}$

$$I_{SS}=I_{D1}+I_{D2}$$

When $V_{in1}=V_{in2}$ **Equilibrium!**

$$I_{D1}=I_{D2}=I_{SS}/2$$

$$V_{out,CM}=V_{DD}-R_D I_{SS}/2$$

- Tail current source I_{SS}:
  - make bias currents independence on the input CM level
  - suppresses the effect of input CM level variations on the operation of M_1 and M_2 and the output level.

Large-signal Analysis

☐ Differential Mode Behavior

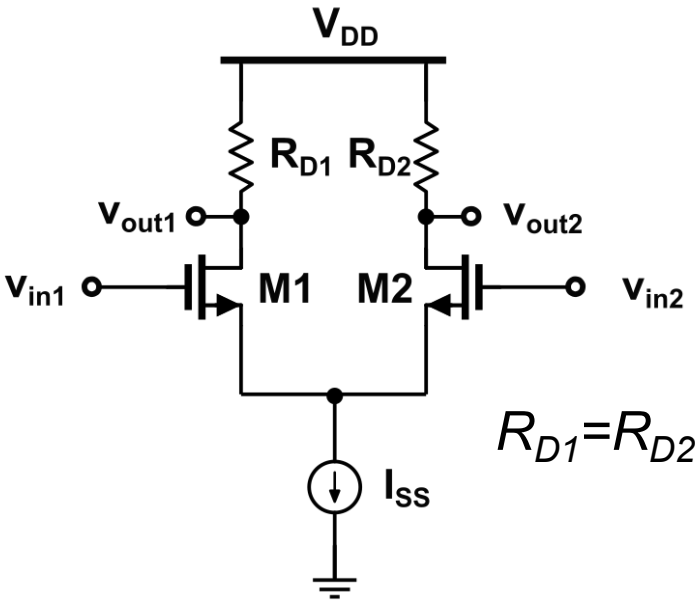

$R_{D1}=R_{D2}=R_D$

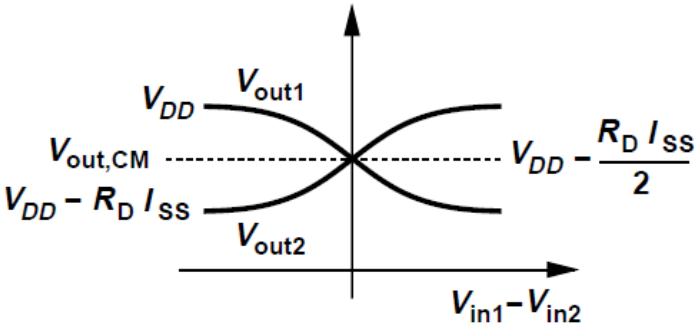

$$\left(V_{in1} - V_{in2}\right): \ -\infty \ \rightarrow \ +\infty$$

1) When $V_{in1} << V_{in2}$, M_1: off, M_2: on, $I_{D2} = I_{SS}$

$V_{out1}=V_{DD}$

$V_{out2}=V_{DD} - R_D I_{SS}$

2) As $V_{in1} \rightarrow V_{in2}$, $\because I_{D1} + I_{D2} = I_{SS}$

M_1: on, $I_{D1} \uparrow$, $V_{out1} \downarrow$;

M_2: on, $I_{D2} \downarrow$, $V_{out2} \uparrow$

3) $V_{in1}=V_{in2}$, $I_{D1} = I_{D2}$ $\qquad V_{out1}>V_{out2}$

$V_{out1}=V_{out2}=V_{DD} - R_D I_{SS}/2$,

→ **<u>the output CM level</u>**

4) When $V_{in1} > V_{in2}$, $I_{D1} > I_{D2}$ and $V_{out1} < V_{out2}$

5) When $V_{in1} >> V_{in2}$, M_1: I_{SS}, M2: off

$V_{out1} = V_{DD} - R_D I_{SS}$

$V_{out2} = V_{DD}$

Large-signal Analysis

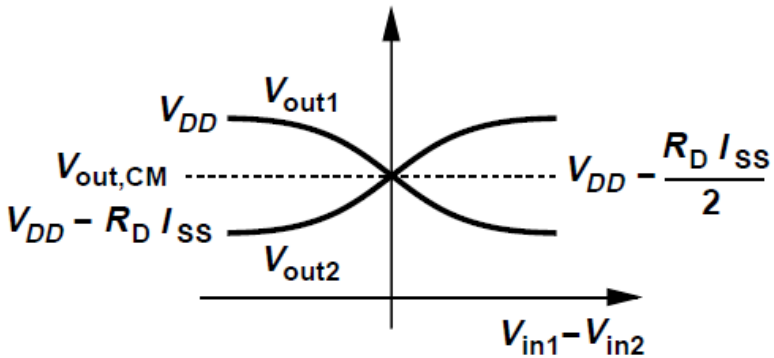

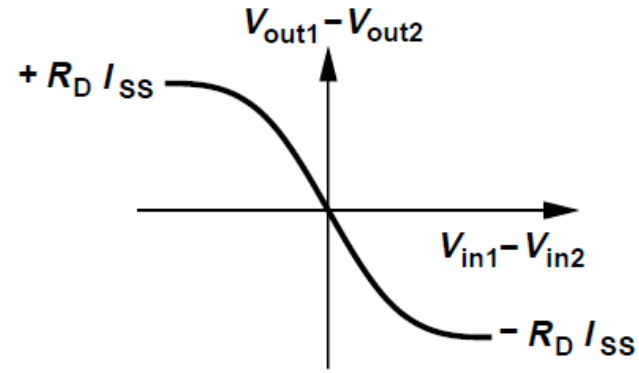

- **Attributes:**
- The maximum and minimum levels at the output are independent of the input CM level

$$V_{max} = V_{DD} \qquad V_{min} = V_{DD} - R_D I_{SS}$$

- The small-signal gain: **slope**
  - maximum @ $V_{in1} = V_{in2}$
  - nonlinear

$$A_v = (V_{out1} - V_{out2}) / (V_{in1} - V_{in2})$$

- For $V_{in1} = V_{in2}$, circuit is said to be in "**equilibrium**"

Common-Mode Behavior

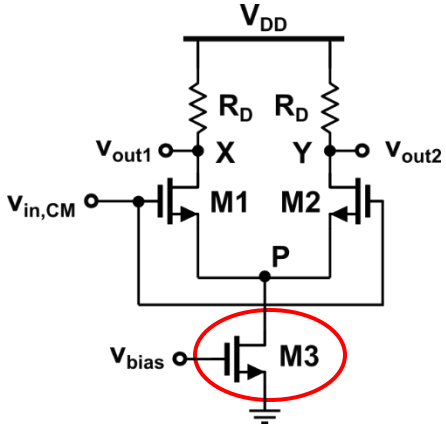

Set $V_{in1} = V_{in2} = V_{in,CM}$

Symmetry: $V_{out1} = V_{out2}$

I_{SS} => M3 => R_{on3}

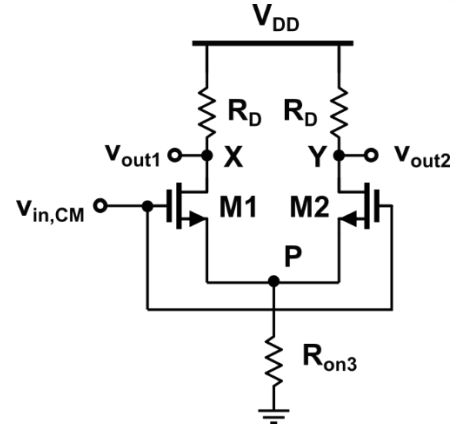

1) For $V_{in,CM} = 0$, M_1 and M_2: off, M_3: in the deep triode region

$I_{D1} = I_{D2} \approx 0$ ➡ $V_{out1} = V_{out2} = V_{DD}$, $V_P = 0$

2) If $V_{in,CM} \geq V_{TH}$, M_1 and M_2: on, I_{D1} and $I_{D2} \uparrow$, $V_P \uparrow$

-- M_1 and M_2: a source follower, forcing V_P to follow $V_{in,CM}$

3) $V_{in,CM} \uparrow$ => $V_P \uparrow$=> M_3: the saturation region

➡ $V_{in,CM} \geq V_{GS1} + (V_{GS3} - V_{TH3})$

$$V_X = V_Y = V_{DD} - \frac{1}{2} I_{SS} R_D$$

lower limit !

upper limit !

4) As $V_{in,CM} \uparrow\uparrow$, V_{out1} and V_{out2} : relatively constant,

if $V_{in,CM} > V_{out1} + V_{TH} = V_{DD} - R_D I_{SS}/2 + V_{TH}$, M_1 and M_2 : the triode region

The allowable range of $V_{in,CM}$ (the input common-mode range, ICMR):

$$V_{GS1} + \left(V_{GS3} - V_{TH3}\right) \leq V_{in,CM} \leq V_{DD} - R_D \frac{I_{SS}}{2} + V_{TH3}$$

Common-Mode Behavior

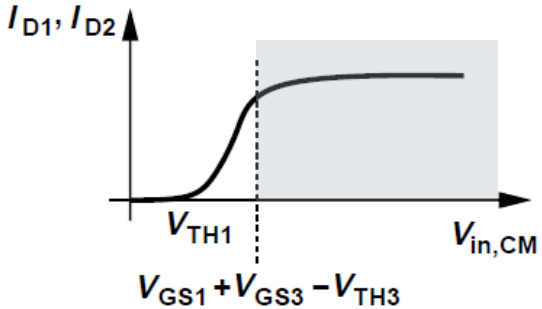

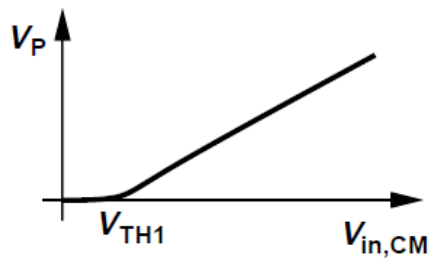

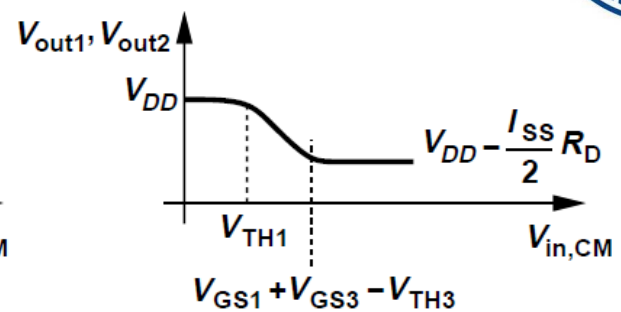

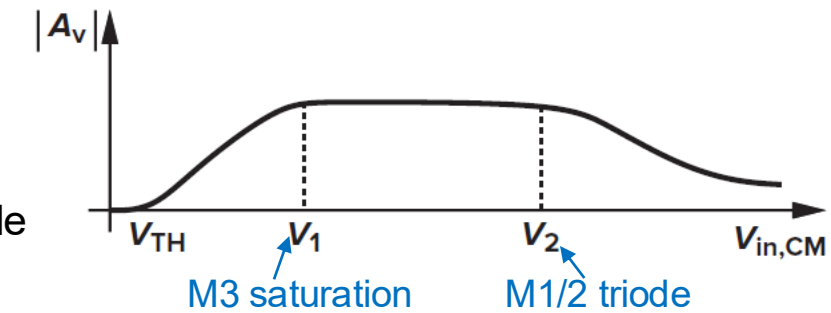

Attributes:

- Gain: the slope of the transfer function
  - when M3: saturation region, Gain: stable
  - when M1/2: linear region, Gain ↓

Tail current source I_{SS}:

1) If it is an ideal current source ($r_O=\infty$), V_{out} is constant, $V_X = V_Y$=constant;
2) If it is not an ideal current source ($r_O\neq\infty$), V_{out} varies, $V_X = V_Y\neq$constant;
3) **$r_O\neq\infty$ and circuit is asymmetry, $V_X \neq V_Y \neq$ constant**

$$CMRR = \left|\frac{A_{DM}}{A_{CM-DM}}\right|$$

Output Swings

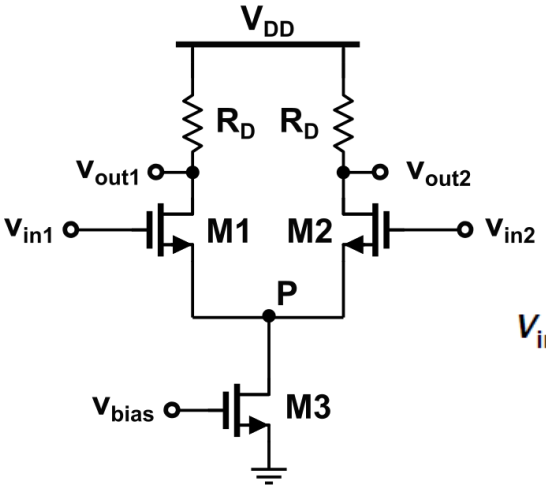

Assume: a high voltage gain, $V_{in,CM} < V_{out,CM}$

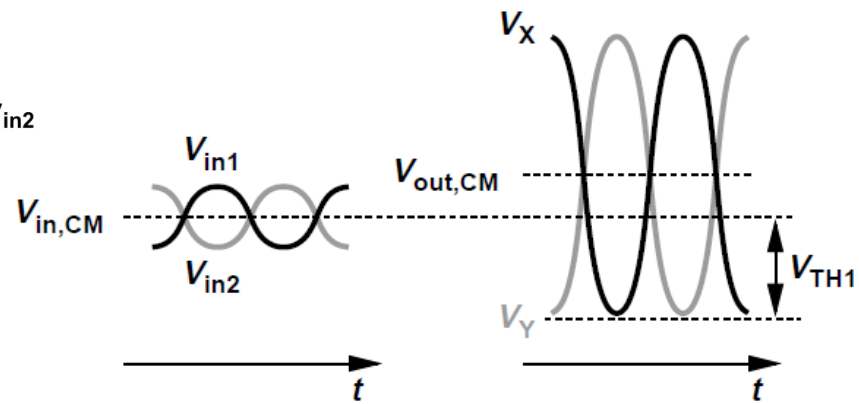

- For M_1 and M_2 to remain saturated,

$$V_{out,max}=V_{DD}$$

$$V_{out,min}=V_{in,CM} - V_{TH1} \qquad V_{in,CM} > V_{GS1} + V_{OV3}=V_{GS1} + (V_{GS3} - V_{TH3})$$

=> $V_{in,CM} \uparrow$, output range $\downarrow$

- With this choice of $V_{in,CM}$, single-ended peak-to-peak swing is

$$V_{DD} - (V_{GS1} - V_{TH1}) - (V_{GS3} - V_{TH3}) = V_{DD} - V_{DS1} - V_{DS3}$$

Large-Signal Analysis

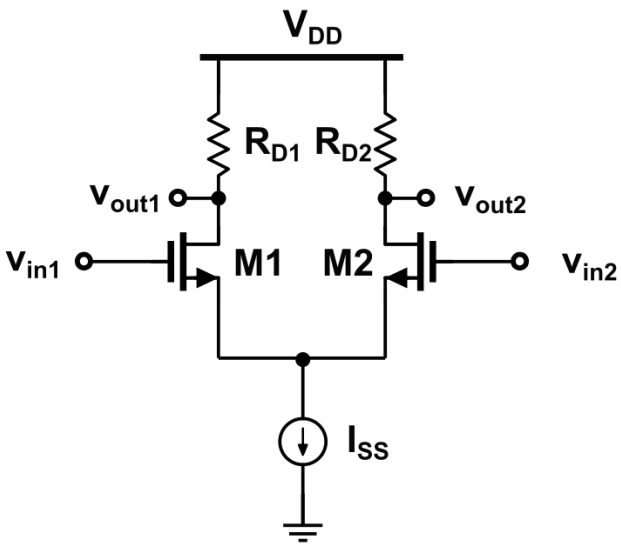

$(V_{out1} - V_{out2}) = \Delta V_{out}$

$(V_{in1} - V_{in2}) = \Delta V_{in}$

$$I_{D1} - I_{D2} = \Delta I_D$$

If $R_{D1} = R_{D2} = R_D$,

$$V_{out1} = V_{DD} - R_{D1} I_{D1}$$
$$V_{out2} = V_{DD} - R_{D2} I_{D2}$$

$$\Rightarrow V_{out1} - V_{out2} = R_D \left(I_{D1} - I_{D2} \right) = R_D \Delta I_D$$

$$\Rightarrow \Delta V_{out} \sim \Delta I_D \sim \Delta V_{in}$$

- Assume the circuit is symmetric, M_1 and M_2 are saturated and $\lambda = 0$

$$V_P = V_{in1} - V_{GS1} = V_{in2} - V_{GS2}$$
$$\Delta V_{in} = V_{in1} - V_{in2} = V_{GS1} - V_{GS2}$$

$$\because \quad V_{TH1} = V_{TH2}$$

For a square-law device

$$V_{GS} = \sqrt{\frac{2I_D}{\mu_n C_{OX} \frac{W}{L}}} + V_{TH} = \sqrt{\frac{2I_D}{\beta}} + V_{TH}$$

$$\beta = \mu_n C_{OX} \left(\frac{W}{L} \right)$$

$$\begin{cases} V_{in1} - V_{in2} = \sqrt{\dfrac{2I_{D1}}{\mu_n C_{OX} \frac{W}{L}}} - \sqrt{\dfrac{2I_{D2}}{\mu_n C_{OX} \frac{W}{L}}} = \sqrt{\dfrac{2I_{D1}}{\beta}} - \sqrt{\dfrac{2I_{D2}}{\beta}} \\ I_{SS} = I_{D1} + I_{D2} \end{cases}$$

Large-Signal Analysis

$$\begin{cases} I_{D1} = \dfrac{I_{SS}}{2} + \dfrac{1}{4}\mu_n C_{OX}\dfrac{W}{L}\Delta V_{in}\sqrt{\dfrac{4I_{SS}}{\mu_n C_{OX}\dfrac{W}{L}} - \Delta V_{in}^2} = \dfrac{I_{SS}}{2} + \dfrac{1}{4}\beta\Delta V_{in}\sqrt{\dfrac{4I_{SS}}{\beta} - \Delta V_{in}^2} \\ I_{D2} = \dfrac{I_{SS}}{2} - \dfrac{1}{4}\mu_n C_{OX}\dfrac{W}{L}\Delta V_{in}\sqrt{\dfrac{4I_{SS}}{\mu_n C_{OX}\dfrac{W}{L}} - \Delta V_{in}^2} = \dfrac{I_{SS}}{2} - \dfrac{1}{4}\beta\Delta V_{in}\sqrt{\dfrac{4I_{SS}}{\beta} - \Delta V_{in}^2} \end{cases}$$

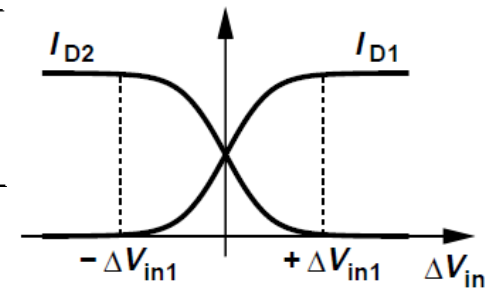

$$\Delta I_D = I_{D1} - I_{D2} = \frac{1}{2}\mu_n C_{OX}\frac{W}{L}\Delta V_{in}\sqrt{\frac{4I_{SS}}{\mu_n C_{OX}\dfrac{W}{L}} - \Delta V_{in}^2}$$

$$= \sqrt{\mu_n C_{OX}\frac{W}{L}I_{SS}}\Delta V_{in}\sqrt{1 - \frac{\mu_n C_{OX}(W/L)}{4I_{SS}}\Delta V_{in}^2} = \frac{\beta}{2}\Delta V_{in}\sqrt{\frac{4I_{SS}}{\beta} - \Delta V_{in}^2}$$

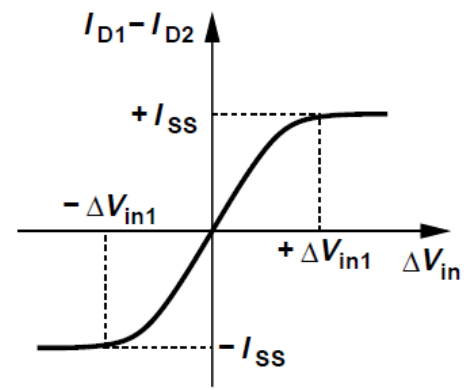

- $I_{D1} - I_{D2}$ is an odd function of $V_{in1} - V_{in2}$, falling to zero for $V_{in1} = V_{in2}$
- As $|V_{in1} - V_{in2}|$ increases from zero, $|I_{D1} - I_{D2}|$ increases

ΔI_D vs. ΔV_{in}

$$\Delta I_D = \frac{1}{2}\mu_n C_{OX}\frac{W}{L}\Delta V_{in}\sqrt{\frac{4I_{SS}}{\mu_n C_{OX}\frac{W}{L}} - \Delta V_{in}^2}$$

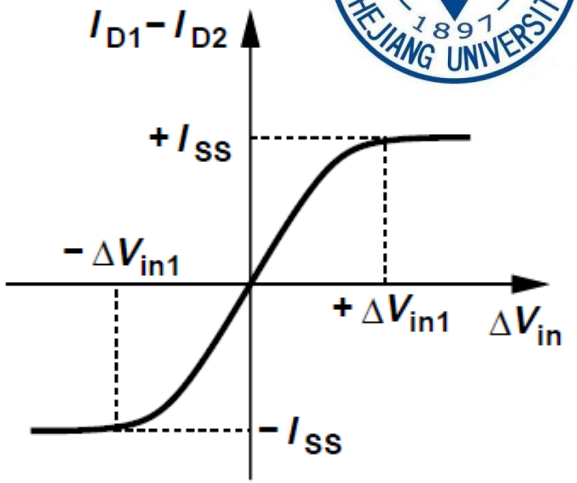

- When ΔVin=0, $\Delta I=0$, in **equilibrium**

When $\Delta V_{in} > \Delta V_{in1}$, one transistor carries the entire I_{SS}, turning off the other

$\because$ $I_{D1} = I_{SS}$, and $\Delta V_{in1} = V_{GS1} - V_{TH}$

$$\therefore \quad \Delta V_{in1} = \sqrt{\frac{2I_{SS}}{\mu_n C_{OX}\frac{W}{L}}}$$

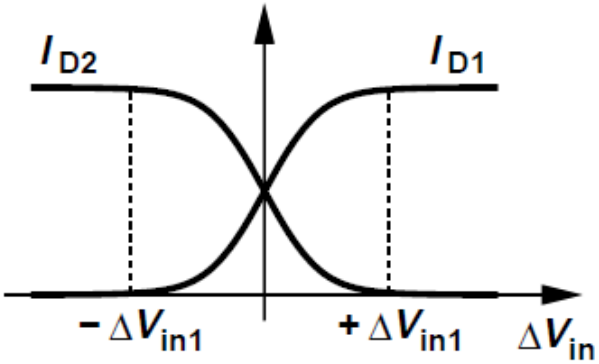

- The range of input signal: $|\Delta V_{in}| \le |\Delta V_{in1}| = \left|\sqrt{\frac{2I_{SS}}{\mu_n C_{OX}\frac{W}{L}}}\right|$

Linear Range

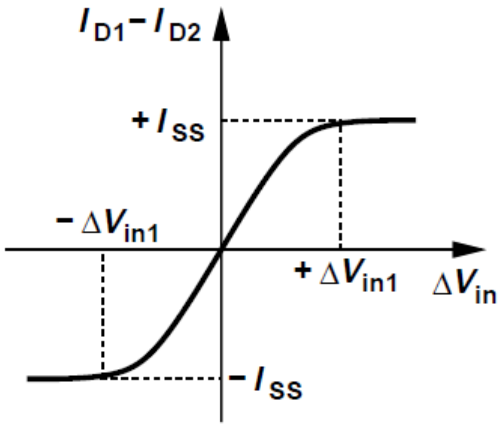

$$\left|\Delta V_{in}\right| \le \left|\Delta V_{in1}\right| = \left|\sqrt{\frac{2I_{SS}}{\mu_n C_{OX}\frac{W}{L}}}\right|$$

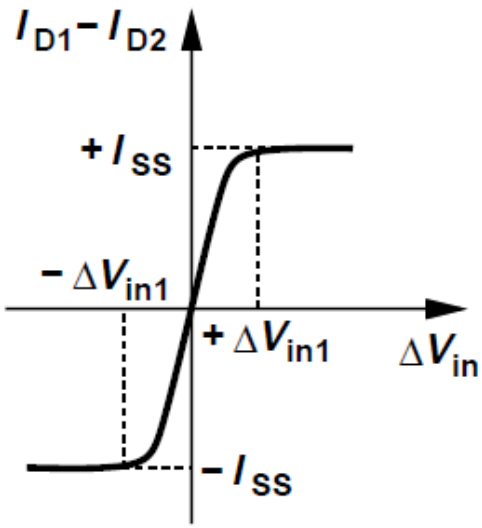

1. W/L↑ => ΔV_{in}↓ ,Gm ↓ ,

   the input range ↓

2. I_{SS}↑=>ΔV_{in}↑, ΔI_D↑

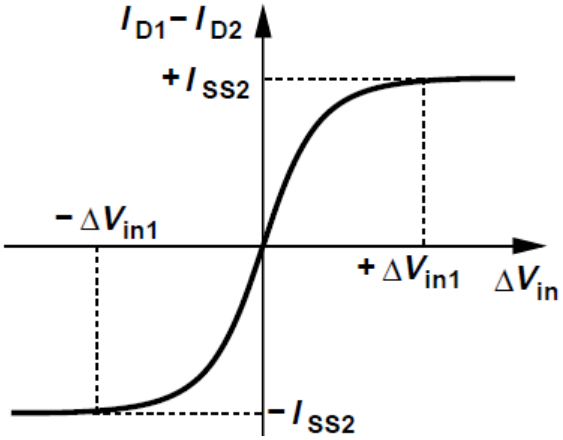

Linear Range

- ΔV_{in1}: the maximum differential input the circuit can "handle"
  - For $\Delta V_{in}=0$, $I_{D1} = I_{D2} = I_{SS}/2$, yielding

$$\left(V_{GS} - V_{TH}\right)_{1,2} = \sqrt{\frac{I_{SS}}{\mu_n C_{OX} \frac{W}{L}}} \qquad v_{ov} = \frac{1}{\sqrt{2}}\sqrt{\frac{I_{SS}}{\mu_n C_{OX} \frac{W}{L}}} = \frac{1}{\sqrt{2}}\Delta V_{in1}$$

  - ΔV_{in1} is equal to $\sqrt{2}$ times the equilibrium overdrive
  - $\Delta V_{in1} \uparrow \rightarrow$ improve linearity increases overdrive of M_1 and M_2,
    - for a given I_{SS} is achieved only by decreasing W/L and hence g_m, thereby reducing differential gain
    - I_{SS} can be increases but with higher power consumption

Trade-off

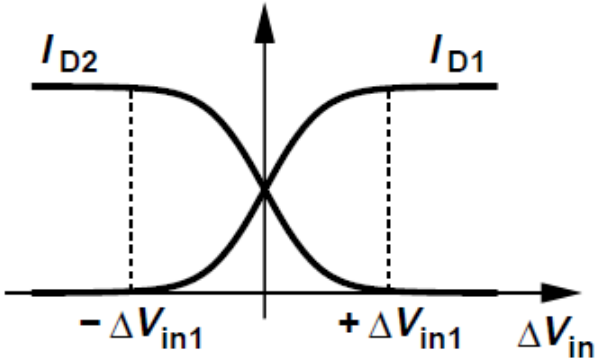

Transconductance G_m

$$\Delta I_D = \frac{1}{2}\mu_n C_{OX}\frac{W}{L}\Delta V_{in}\sqrt{\frac{4I_{SS}}{\mu_n C_{OX}\frac{W}{L}} - \Delta V_{in}^2}$$

$$G_m = \frac{\partial \Delta I_D}{\partial \Delta V_{in}} = \frac{1}{2}\mu_n C_{OX}\frac{W}{L}\frac{\frac{4I_{SS}}{\mu_n C_{OX}(W/L)} - 2\Delta V_{in}^2}{\sqrt{\frac{4I_{SS}}{\mu_n C_{OX}(W/L)} - \Delta V_{in}^2}}$$

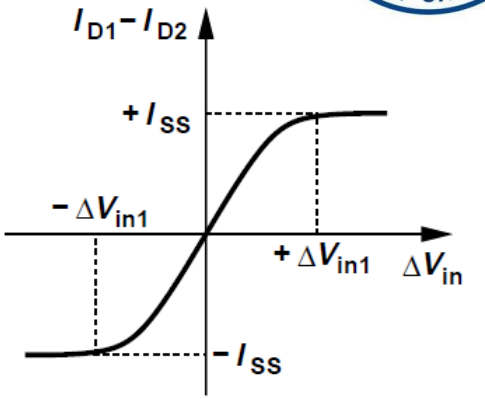

- When $\Delta V_{in} = \Delta V_{in1}$, $G_m = 0$
- When $\Delta V_{in} = 0$, G_m is maximum

$$G_{m,max} = \sqrt{\mu_n C_{OX}\frac{W}{L} I_{SS}}$$

  - $\because V_{out1} - V_{out2} = R_D \Delta I_D = -R_D G_m \Delta V_{in}$,
  - small-signal differential voltage gain in equilibrium condition is

$$A_v = -G_m R_D = -\sqrt{\mu_n C_{OX}(W/L) I_{SS}}\, R_D$$
$$= -g_{m1,2} R_D$$

Be same as g_m of M1/M2!!

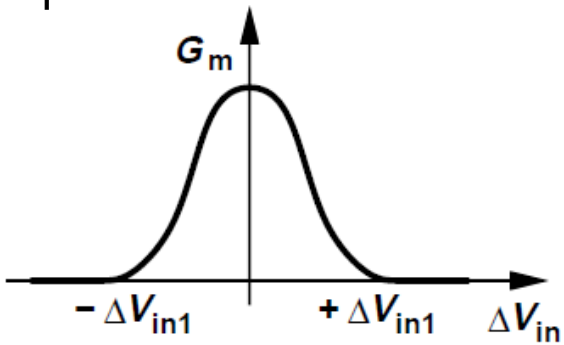

Small-Signal Analysis

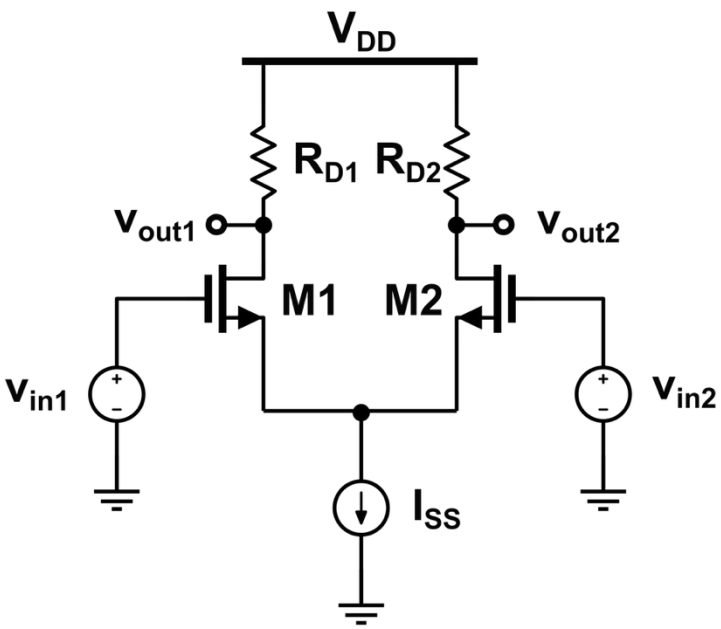

Assume M_1 and M_2 are saturated

$$\left|A_v\right| = \left|G_m R_D\right| = \sqrt{\mu_n C_{OX}\left(W/L\right) I_{SS}}\, R_D$$

∵each transistor carries approximately $I_{SS}/2$ current in the vicinity of equilibrium

$$\left|A_v\right| = g_m R_D$$

- **Method 1: Superposition**
- **Method 2: Half-Circuit**

Method 1: Superposition

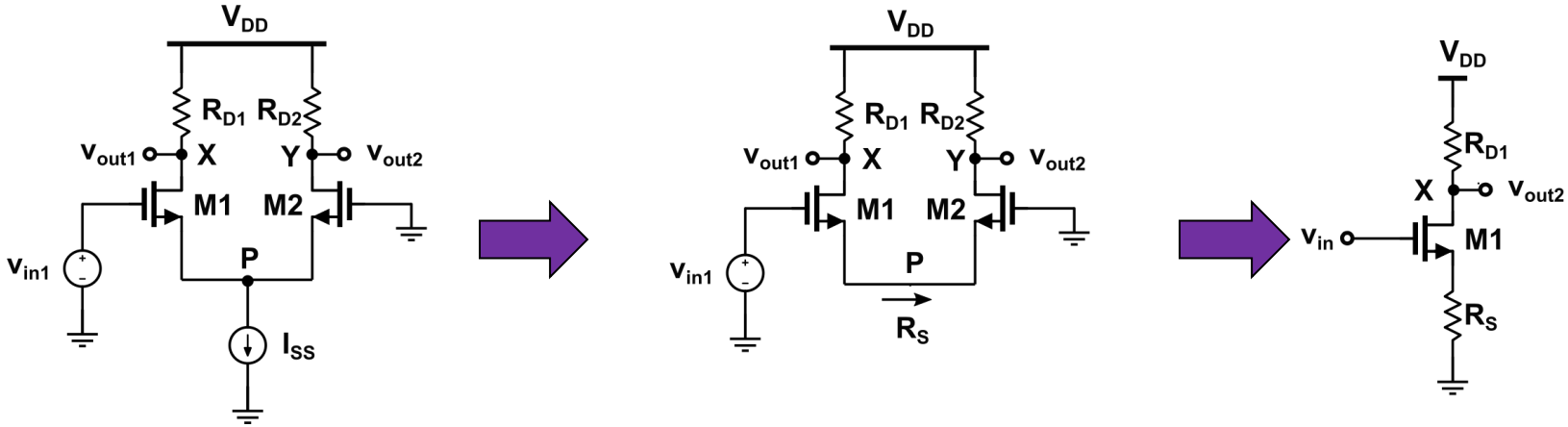

assuming I_{SS} is ideal current source, $r_O=\infty$

$$\frac{V_X}{V_{in1}} = -\frac{g_{m1}}{1+g_{m1}R_S}R_D = \frac{-R_D}{\frac{1}{g_{m1}}+\frac{1}{g_{m2}}}$$

Method 1: Superposition

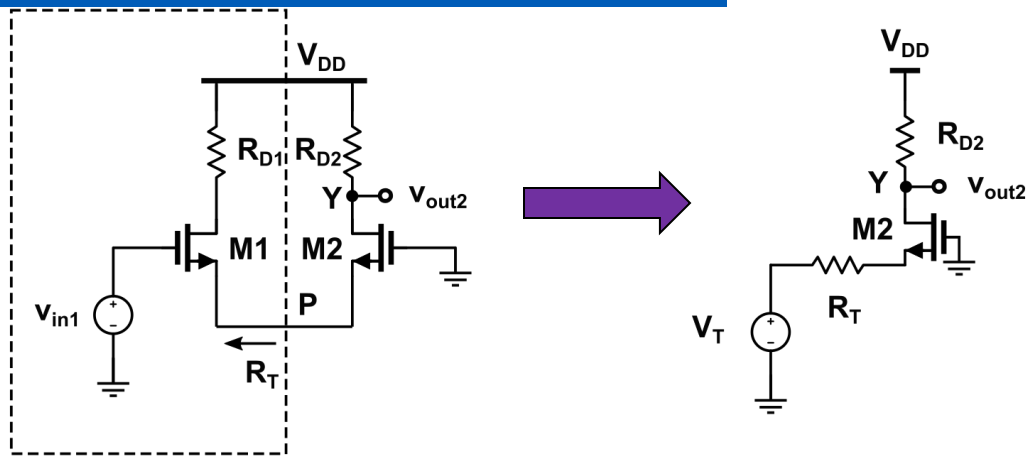

- **To find V_Y:** note that M_1 drives M_2 as a source follower and replace V_{in1} and M_1 by a Thevenin equivalent
  - Thevenin voltage $V_T = V_{in1}$, and resistance $R_T = 1/g_{m1}$
  - M2 operates as a CG stage, with a gain

$$\frac{V_Y}{V_{in1}} = \frac{R_D}{\frac{1}{g_{m2}} + \frac{1}{g_{m1}}}$$

The overall voltage gain for V_{in1}

$$\left(V_X - V_Y\right)\Big|_{\text{Due to}V_{in1}} = \frac{-2R_D}{\frac{1}{g_{m1}} + \frac{1}{g_{m2}}} V_{in1}$$

$g_{m1} = g_{m2} = g_m$

$$\left(V_X - V_Y\right)\Big|_{\text{Due to}V_{in1}} = -g_m R_D V_{in1}$$

$$\boxed{\frac{\left(V_X - V_Y\right)}{V_{in1}} = -g_m R_D}$$

Method 1: Superposition

2) By symmetry, the effect of V_{in2} at X and Y is identical to that of V_{in1} with reverse polarities

$$\left(V_X - V_Y\right)\Big|_{\text{Due to } V_{in2}} = g_m R_D V_{in2}$$

$$\boxed{\frac{\left(V_X - V_Y\right)}{V_{in2}} = g_m R_D}$$

3) Adding the two results to perform superposition,

$$\frac{\left(V_X - V_Y\right)_{tot}}{V_{in1} - V_{in2}} = -g_m R_D$$

Conclusions:

双端输入双端输出： $A_V = g_m R_D$

单端输入双端输出： $A_V = g_m R_D$

双端输入单端输出： $A_V = \frac{1}{2} g_m R_D$

- Magnitude of gain is $g_m R_D$ regardless of how inputs are applied, halved for single-ended output

Method 2: Half-Circuit

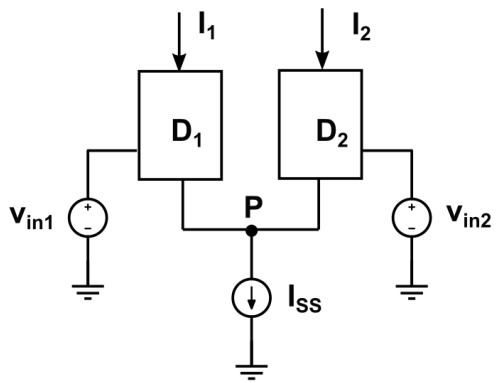

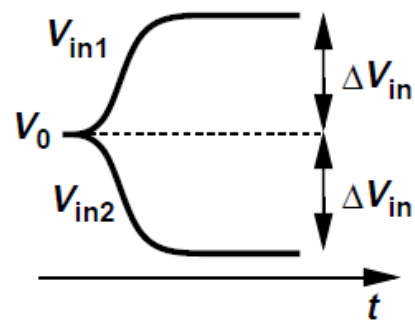

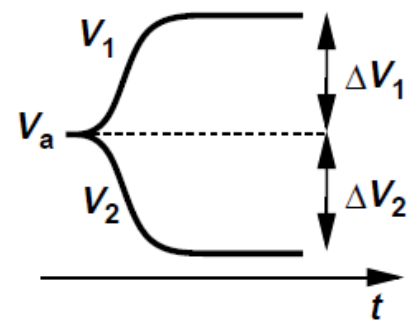

Lemma : D_1 and D_2 : 3-terminal active device in a symmetric circuit.

Suppose V_{in1} changes from V_0 to $V_0 + \Delta V_{in}$ and V_{in2} changes from V_0 to $V_0 - \Delta V_{in}$. If the circuit remains linear, $\boldsymbol{V_P}$ **does not change** (acts as a **virtual** or **ac ground**). Assume λ=0.

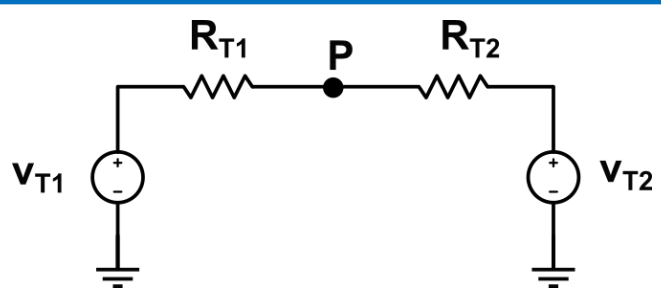

Method 2: Half-Circuit

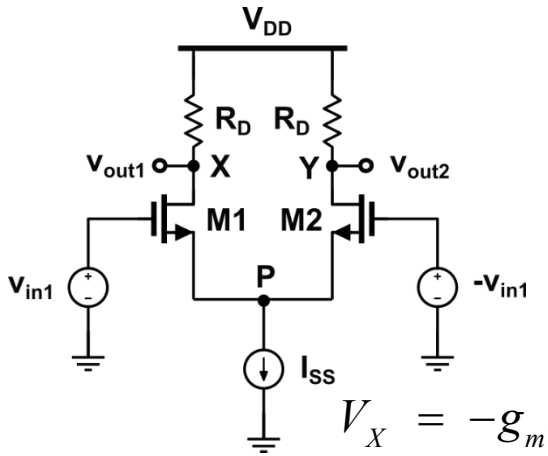

V_P : **virtual ground**

or **ac ground**

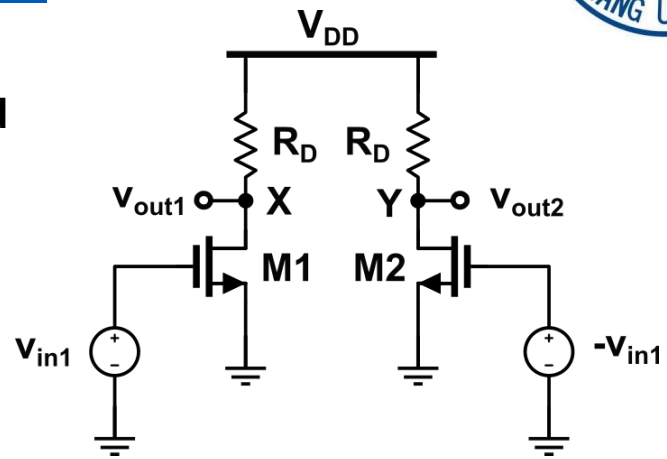

$$V_X = -g_m R_D V_{in1}$$

$$V_Y = -g_m R_D \left(-V_{in1}\right)$$

$$V_X - V_Y = -g_m R_D \left(2V_{in1}\right)$$

$$A_V = \frac{V_X - V_Y}{2V_{in1}} = -g_m R_D$$

Example

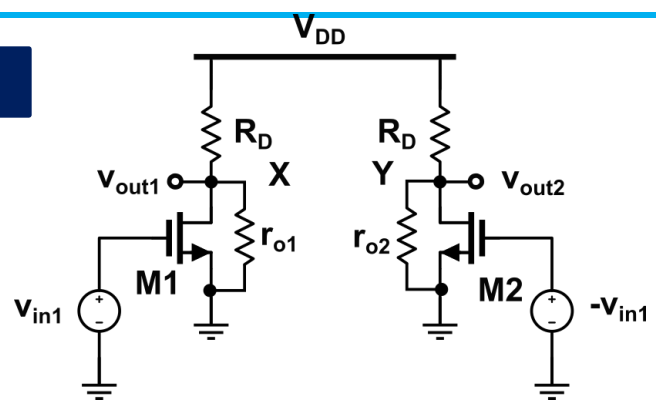

$$\frac{V_X - V_Y}{2V_{in1}} = -g_m \left(R_D // r_O\right)$$

$$r_O = r_{O1} = r_{O2}$$

Method 2: Half-Circuit

? if the two inputs are not fully differential

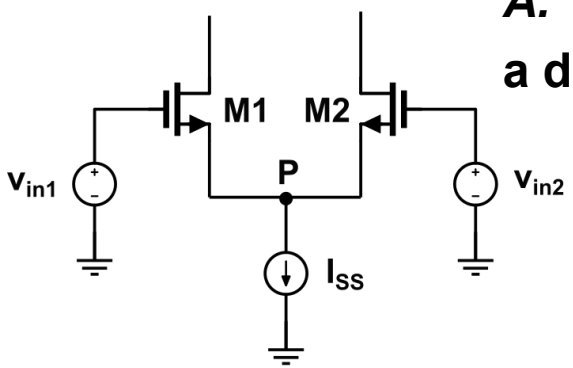

A. **V_{in1} and V_{in2} :**

a differential component + a common-mode component

$$V_{in1} = \frac{V_{in1} - V_{in2}}{2} + \frac{V_{in1} + V_{in2}}{2}$$

$$V_{in2} = \frac{V_{in2} - V_{in1}}{2} + \frac{V_{in1} + V_{in2}}{2}$$

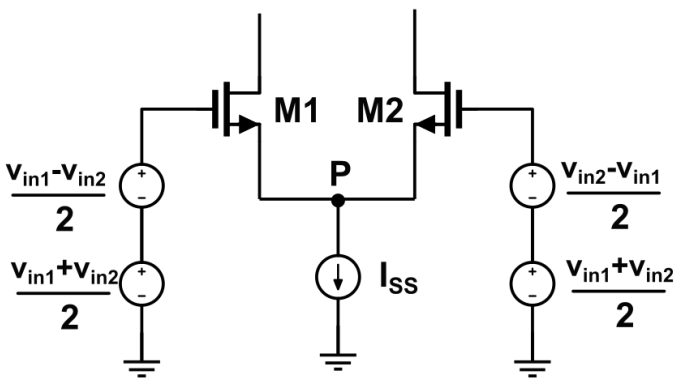

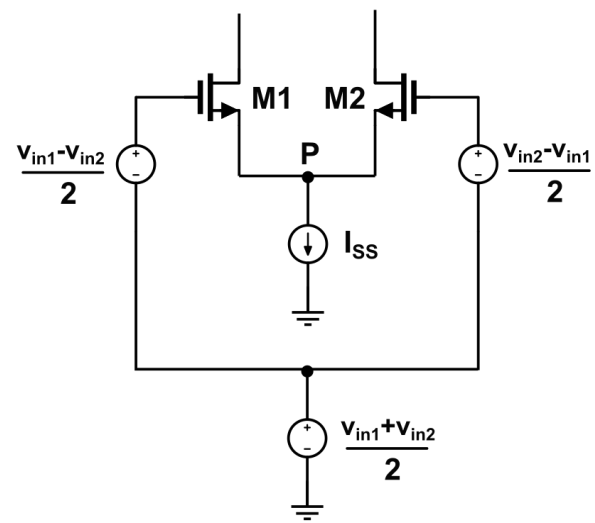

Half-circuit Technique

***B.* Effect of each type of input can be computed by superposition**, with the half-circuit applied to the differential-mode operation

Differential signals + Common-mode signals

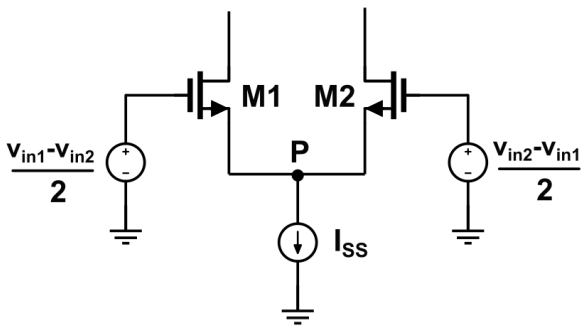

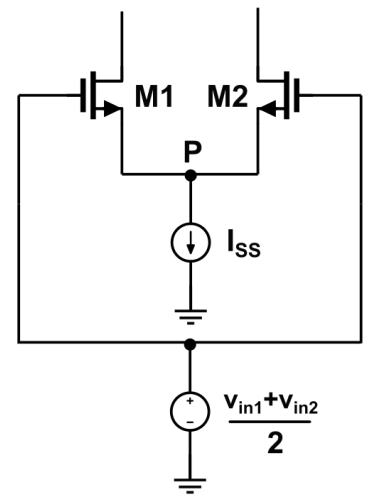

For differential-mode operation

$$V_X = -g_m\left(R_D//R_{O1}\right)\frac{V_{in1}-V_{in2}}{2}$$

$$V_Y = -g_m\left(R_D//R_{O2}\right)\frac{V_{in2}-V_{in1}}{2}$$

$$V_X - V_Y = -g_m\left(R_D//R_{O2}\right)\left(V_{in1}-V_{in2}\right)$$

For common-mode operation

- If circuit is fully symmetric and I_{SS} is an ideal current source

  $I_{D1} = I_{D2} = I_{SS}/2$, and independent of $V_{in,CM}$

  $V_X = V_Y = V_{DD} - R_D(I_{SS}/2)$, and do not vary with $V_{in,CM}$

The circuit simply amplifies $V_{in1} - V_{in2}$ while eliminating the effect $V_{in,CM}$

Outline

- Single-Ended and Differential Ended
- Basic Differential Pair
- Common-Mode Response
- Differential Pair with MOS Loads
- Differential Pair with Active Current Mirrors

In reality, the differential pair is not fully symmetric and the tail current source exhibits a finite output impedance.
A fraction of the input CM variations appear at the output.

(1) I_{SS} with output impedance R_{SS}

Assume circuit is symmetric, $R_L = R_D/2$, M_1 and M_2 are "in parallel": $G_m = 2g_m$

$$A_{v,CM} = \frac{V_{out}}{V_{in,CM}} = -\frac{R_D/2}{R_{SS} + 1/(2g_m)}$$

when $\lambda = \gamma = 0$

- $V_{in,CM} \uparrow \rightarrow V_P \uparrow,\ V_X\ (V_Y) \downarrow$
- Input CM variations disturb bias points and affect A_v and output swings

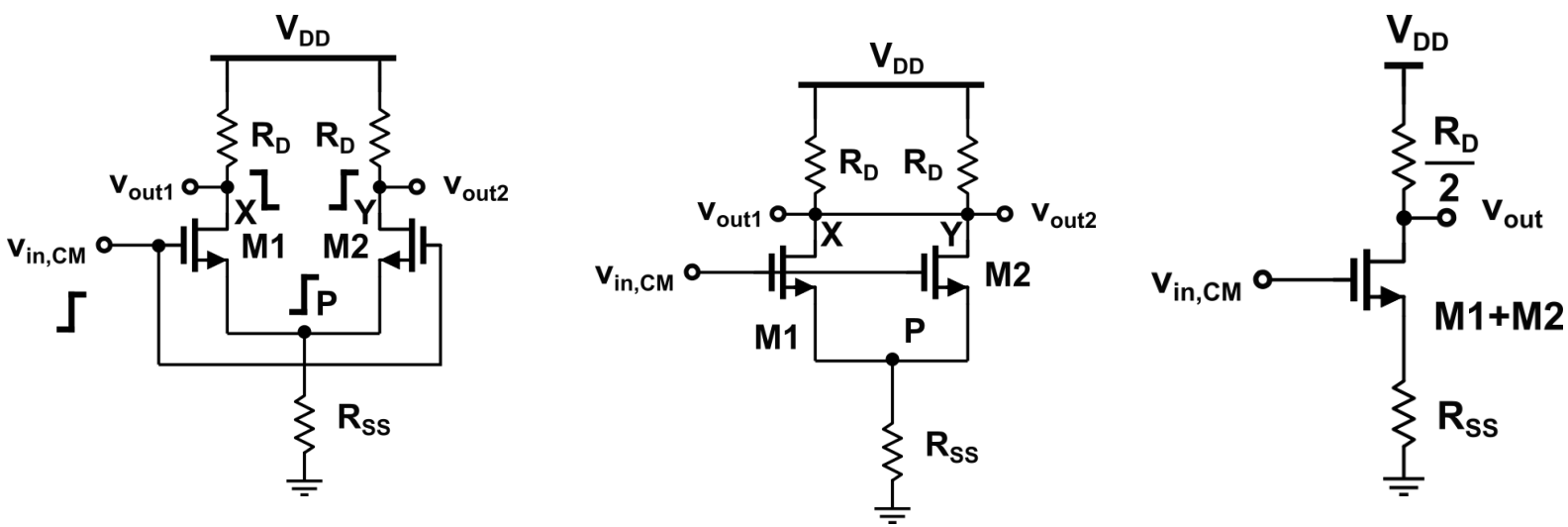

Common-Mode Response

When the circuit is not fully symmetric,
$V_{in,CM}$ => $V_{out,DM}$

(2) $R_{D1} \neq R_{D2}$

Assume $R_{D1} = R_D$, $R_{D2} = R_D + \Delta R_D$,
M_1, M_2 is symmetric ($\lambda = \gamma = 0$)

$$\Delta I_{D1} = \Delta I_{D2} = \Delta I_D \qquad \Delta I_D = \frac{g_m}{(1 + 2g_m R_{SS})} \Delta V_{in,CM}$$

$$\Delta V_X = -\Delta V_{in,CM} \frac{g_m}{1 + 2g_m R_{SS}} R_D$$

$$\Delta V_Y = -\Delta V_{in,CM} \frac{g_m}{1 + 2g_m R_{SS}} (R_D + \Delta R_D)$$

so $$A_{CM-DM} = -\frac{g_m \Delta R_D}{1 + 2g_m R_{SS}}$$

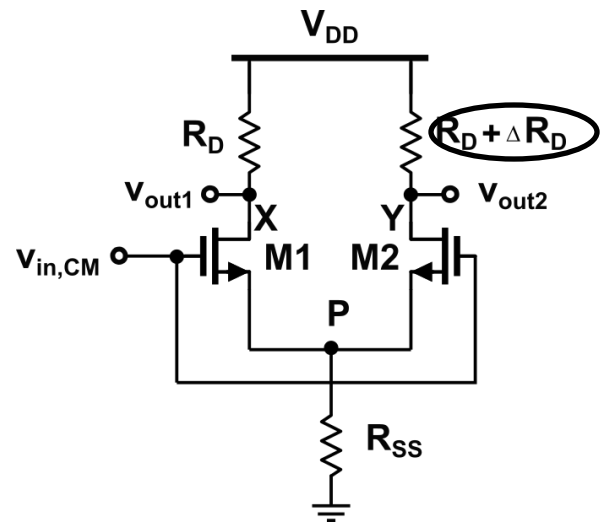

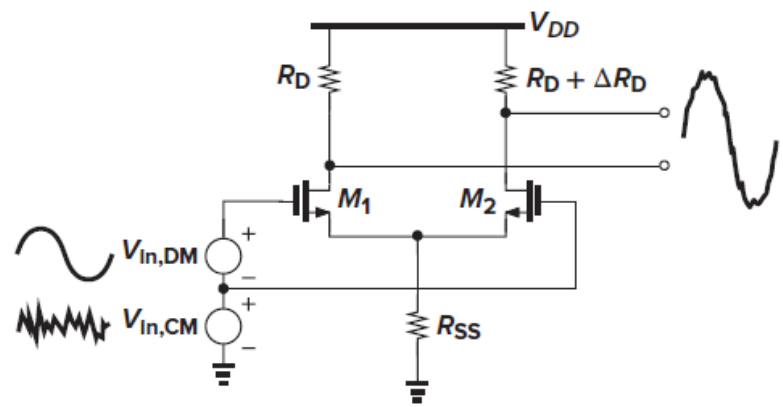

Common mode input generate a Differential output!!

--M_1 and M_2 operate as one source follower, raising V_P by

$$\Delta V_P = -\frac{R_{SS}}{R_{SS} + 1/(2g_m)} \Delta V_{in,CM}$$

Mismatch

$g_{m1} \neq g_{m2} \Rightarrow I_{D1} \neq I_{D2}$

$$\left(g_{m1} + g_{m2}\right)\left(V_{in,CM} - V_P\right) = I_{D1} + I_{D2}$$

$$\left(g_{m1} + g_{m2}\right)\left(V_{in,CM} - V_P\right) R_{SS} = V_P$$

$$V_P = \frac{\left(g_{m1} + g_{m2}\right) R_{SS}}{1 + \left(g_{m1} + g_{m2}\right) R_{SS}} V_{in,CM}$$

$$V_X = -g_{m1}\left(V_{in,CM} - V_P\right) R_D = \frac{-g_{m1}}{\left(g_{m1} + g_{m2}\right) R_{SS} + 1} R_D V_{in,CM}$$

$$V_Y = -g_{m2}\left(V_{in,CM} - V_P\right) R_D = \frac{-g_{m2}}{\left(g_{m1} + g_{m2}\right) R_{SS} + 1} R_D V_{in,CM}$$

$$V_X - V_Y = -\frac{g_{m1} - g_{m2}}{1 + \left(g_{m1} + g_{m2}\right) R_{SS}} R_D V_{in,CM}$$

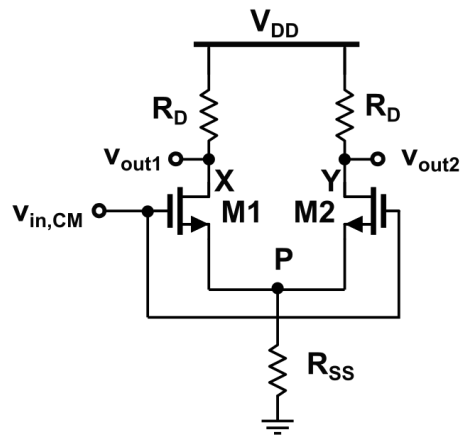

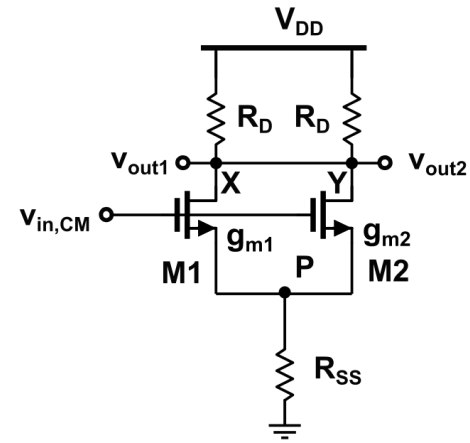

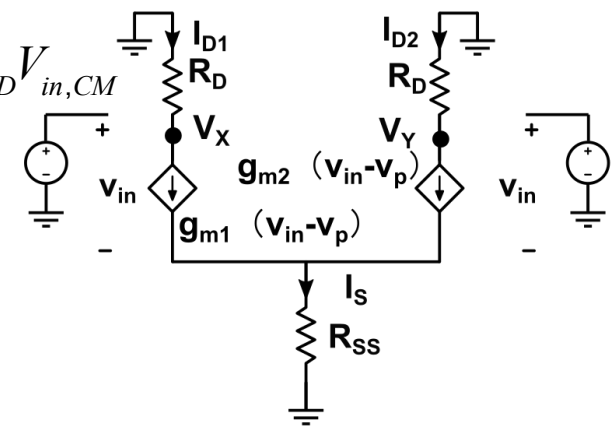

Mismatch

- $A_{CM\text{-}DM}$: common-mode to differential-mode conversion

$$A_{CM-DM} = -\frac{\Delta g_m R_D}{1 + \left(g_{m1} + g_{m2}\right) R_{SS}}$$

-- be similar with that of ΔR_D.

-- $\Delta g_m = g_{m1} - g_{m2}$

- **If g_m mismatch is considered, including R_{SS}, superposition**

$$\left|A_{DM}\right| = \frac{R_D}{2} \frac{g_{m1} + g_{m2} + 4 g_{m1} g_{m2} R_{SS}}{1 + \left(g_{m1} + g_{m2}\right) R_{SS}}$$

$$CMRR = \frac{g_{m1} + g_{m2} + 4 g_{m1} g_{m2} R_{SS}}{2 \Delta g_m} \approx \frac{g_m}{\Delta g_m}\left(1 + 2 g_m R_{SS}\right)$$

- **g_m denotes the mean value, i.e., $g_m = (g_{m1} + g_{m2})/2$**
- **$2 g_m R_{SS} >> 1$ and hence** $CMRR \approx 2 g_m^2 R_{SS} / \Delta g_m$

Common-Mode Rejection Ratio (CMRR): the desired gain divided by undesired gain

$$CMRR = \frac{A_{DM}}{A_{CM-DM}}$$

- Common-mode response:

1) variation of the output CM level

2) differential components at the output

Input Offset Voltage

当差动对管不对称时，存在共模信号到差模信号的转换

思路：输入端加以输入失调电压，使$V_{out1}=V_{out2}$

定义：不考虑负载的匹配问题，当$I_{D1}=I_{D2}$时，M1和M2的V_{GS}之差

$$V_{OS} = V_{in1} - V_{in2} = V_{GS1} - V_{GS2} = \Delta V_{GS}$$

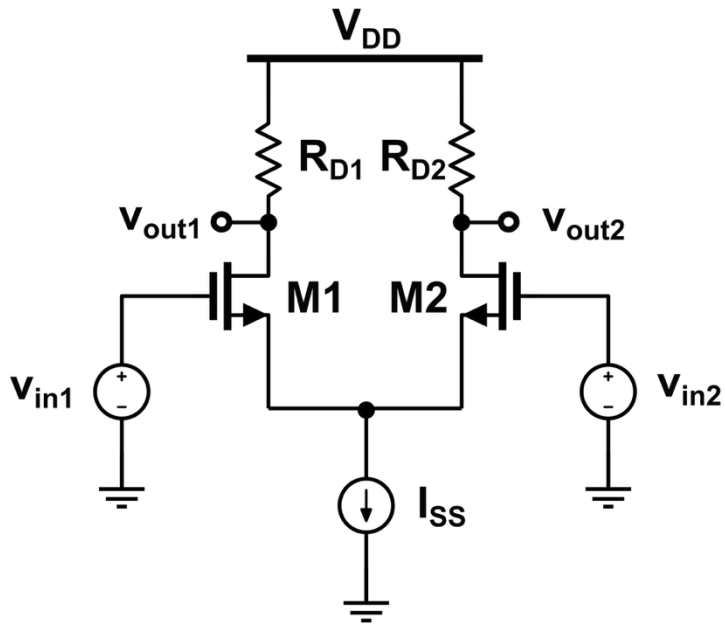

推导：

$$\left.\begin{aligned} I_{D1} &= \frac{\beta_1}{2}(V_{GS1}-V_{TH1})^2 \\ I_{D2} &= \frac{\beta_2}{2}(V_{GS2}-V_{TH2})^2 \\ I_{D1} &= I_{D2} = I_{ss}/2 \end{aligned}\right\} \Rightarrow \left\{\begin{aligned} V_{GS1} &= V_{TH1} + \sqrt{\frac{I_{ss}}{\beta_1}} \\ V_{GS2} &= V_{TH2} + \sqrt{\frac{I_{ss}}{\beta_2}} \end{aligned}\right.$$

$$V_{os} = V_{GS1} - V_{GS2} = V_{T1} - V_{T2} + \left(\sqrt{\frac{I_{ss}}{\beta_1}} - \sqrt{\frac{I_{ss}}{\beta_2}}\right)$$

$$= \Delta V_T + \left(\sqrt{\frac{I_{ss}}{\beta_1}} - \sqrt{\frac{I_{ss}}{\beta_2}}\right) \xrightarrow{\beta_1=\beta,\beta_2=\beta+\Delta\beta} = \Delta V_T + \sqrt{\frac{I_{ss}}{\beta}}\left(1 - \frac{1}{\sqrt{1+\Delta\beta/\beta}}\right)$$

Input Offset Voltage

$$\because (1+x)^{\frac{1}{2}} = 1 + \frac{1}{2}x \qquad V_{os} = \Delta V_T + \sqrt{\frac{I_{ss}}{\beta}} \frac{\Delta\beta/2\beta}{1+\Delta\beta/2\beta} \approx \Delta V_T + \sqrt{\frac{I_{ss}}{4\beta}} \frac{\Delta\beta}{\beta}$$

$$\because \beta = \mu_n C_{ox} \frac{W}{L} \qquad \therefore \left|\frac{\Delta\beta}{\beta}\right| = \left|\frac{\Delta W}{W}\right| + \left|\frac{\Delta L}{L}\right|$$

假定 μ_n、C_{ox} 不变。

则： $$V_{os} = \Delta V_T + \sqrt{\frac{I_{ss}}{4\beta}} \left(\left|\frac{\Delta W}{W}\right| + \left|\frac{\Delta L}{L}\right| \right)$$

$$\because g_m = \sqrt{\beta I_{ss}} \Rightarrow V_{os} = \Delta V_T + \frac{I_{ss}}{2g_m} \left(\left|\frac{\Delta W}{W}\right| + \left|\frac{\Delta L}{L}\right| \right)$$

结论： a) 和 ΔV_T成正比，因此MOS管的失调电压大。

b) 增加器件的尺寸，Vos 下降。

c) 版图匹配好，Vos下降。

Layout Issue: Symmetry

- Asymmetries may lead to inevitable mismatch,
  - introducing input-referred offsets, and limiting the minimum signal level
  - the effect of CM noise and even-order nonlinearity

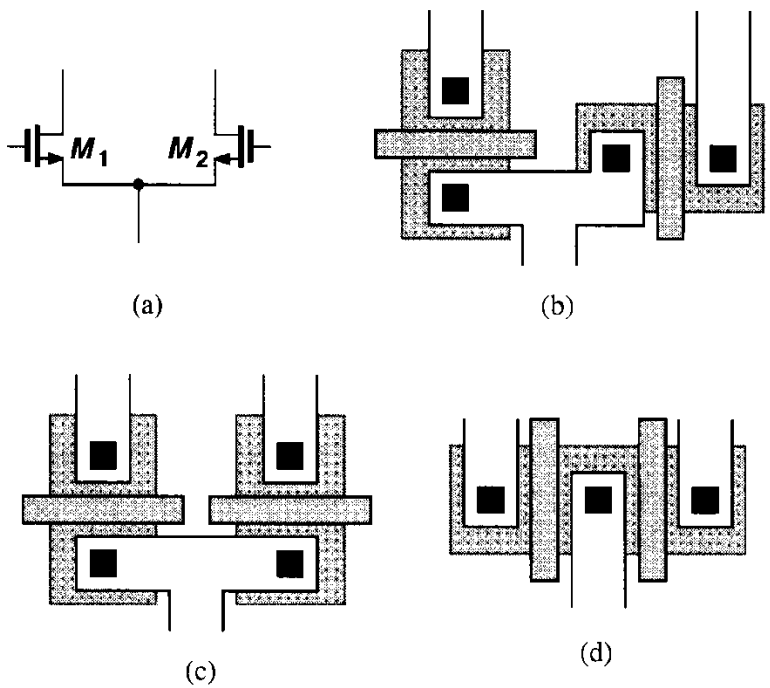

Figure 18.13 (a) Differential pair, (b) layout of M_1 and M_2 with different orientations, (c) layout with gate-aligned devices, (d) layout with parallel-gate devices.

Gate Shadowing

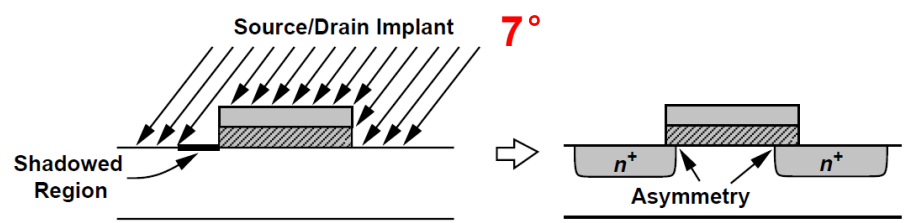

- The implant is tilted by about 7 °
- A small asymmetry between source and drain side diffusions

Dummy Transistors

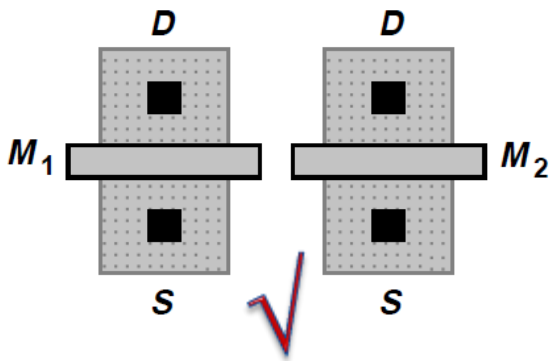

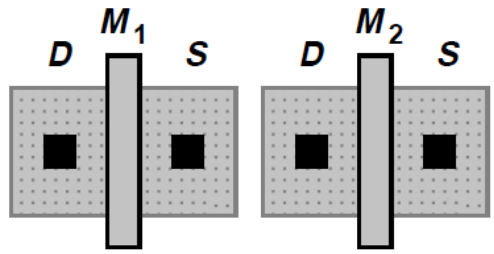

- The asymmetry inherent to the structures can be ameliorated by adding "dummy" transistors

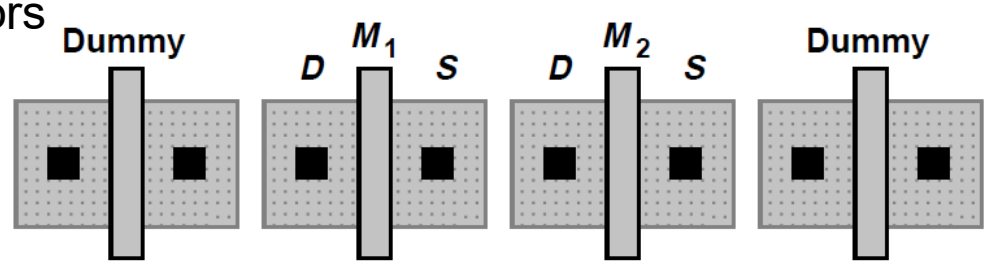

- Emphasize the importance of the axis of symmetry

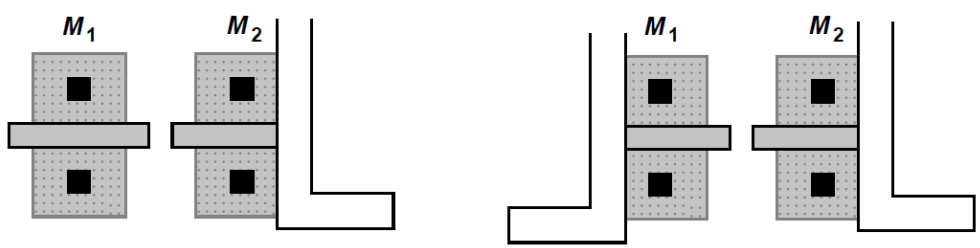

Common-Centroid

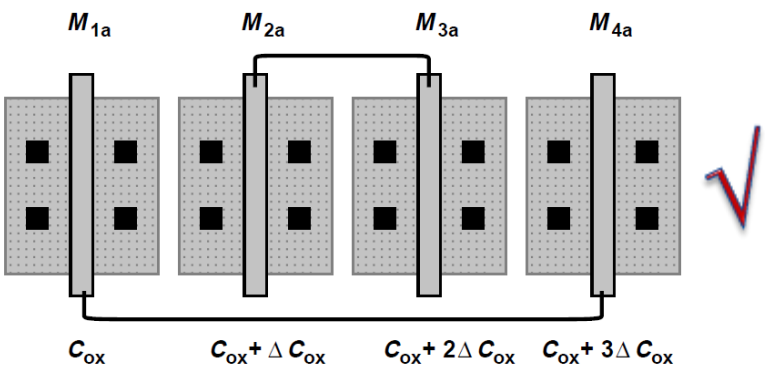

(a)

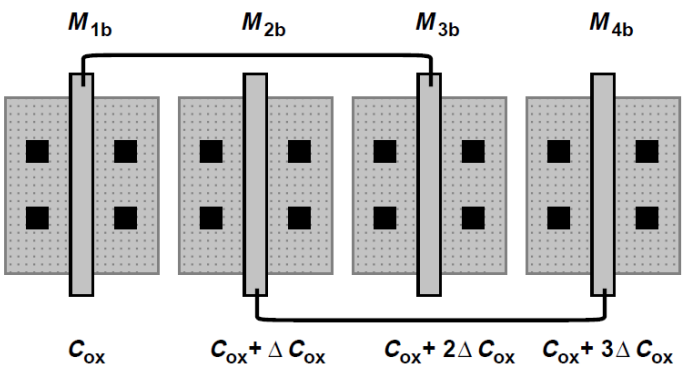

(b)

- How to connect? How to remove the error?
- Dummy transistors mush to added to the very left and right

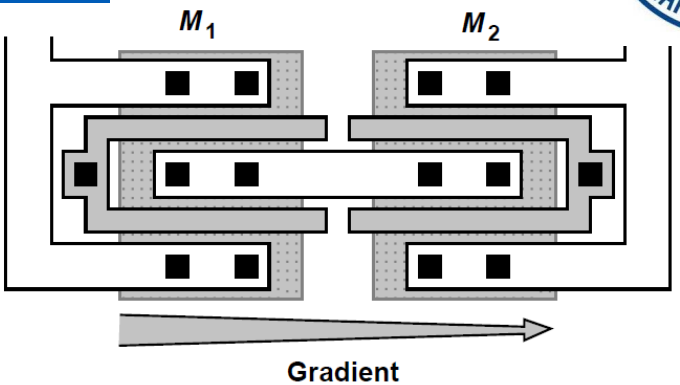

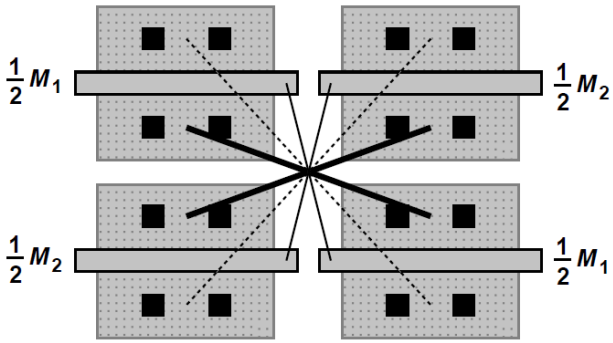

- Gradients along certain(x-axis) axis
- Decompose each transistor into two halves that are placed diagonally opposite each other
- The routing of interconnects is quite difficult

Example

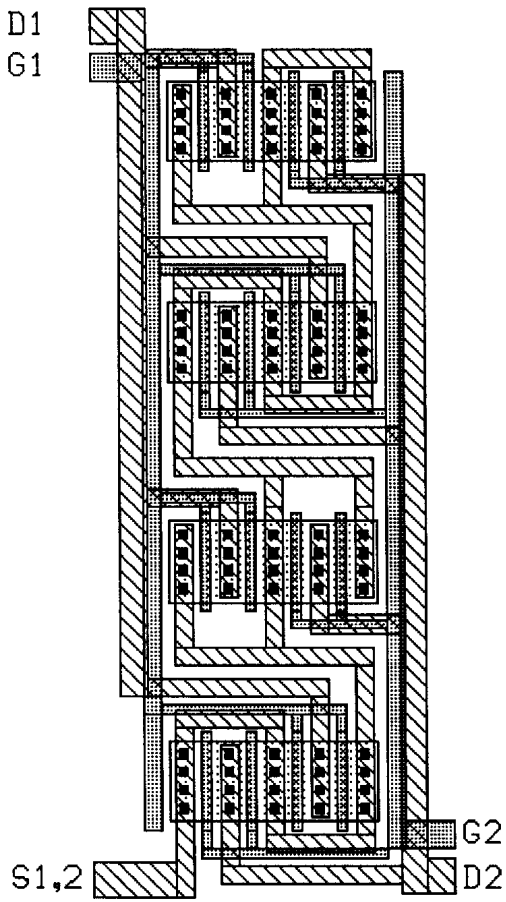

(a)

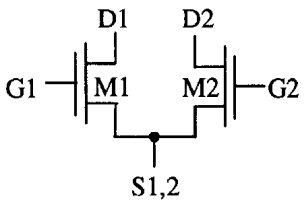

(b)

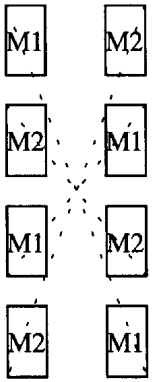

(c)

(a)Common-centroid layout for the differential pair of (b)with parasitic matching
(c) layout of MOSFETs and common center

Example

- Three rules for Layout
  - Symmetry!
  - Symmetry!
  - Symmetry!

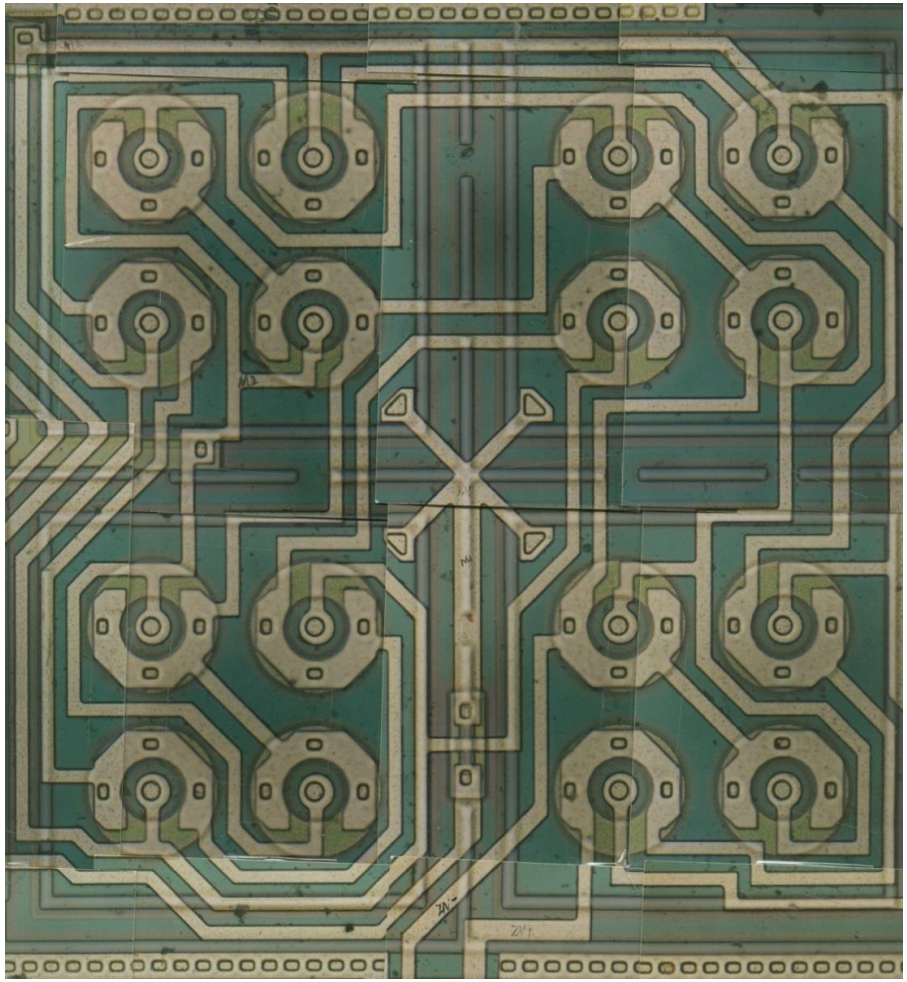

Example

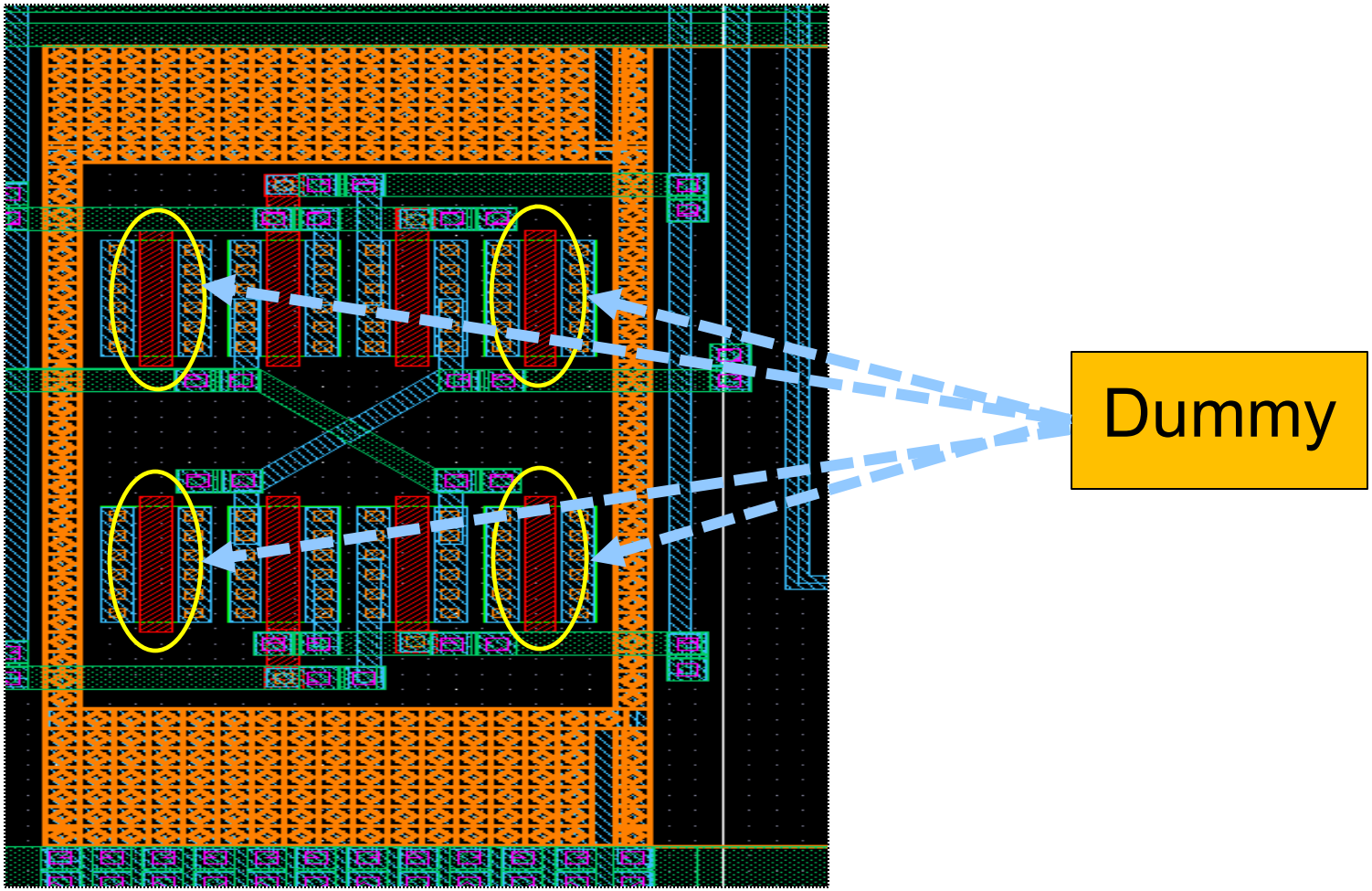

Example

- The layout of two capacitors with 8-to-1 matching

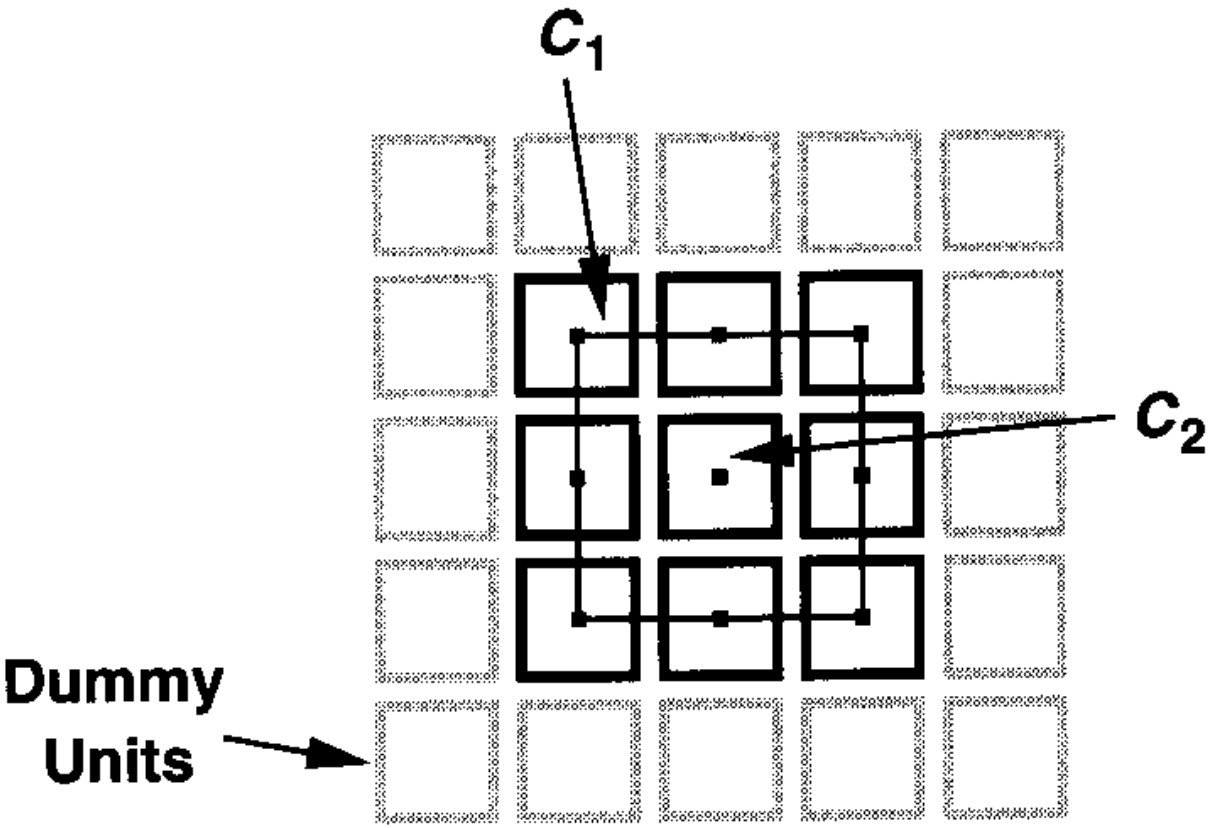

Outline

- Single-Ended and Differential Ended
- Basic Differential Pair
- Common-Mode Response
- Differential Pair with MOS Loads
- Differential Pair with Active Current Mirrors

Diode-connected MOS

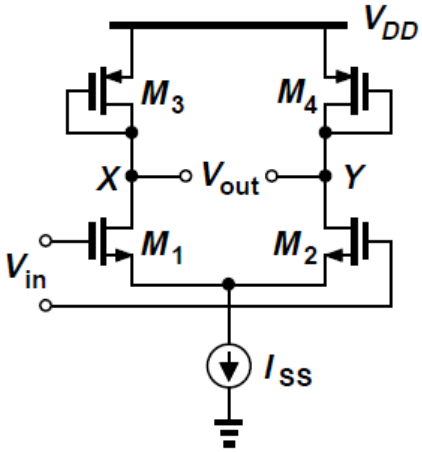

$$R_D = \frac{1}{g_{mP}}$$

$$A_v = -g_{mN}\left(g_{mP}^{-1} // r_{ON} // r_{OP}\right)$$

$$\approx -\frac{g_{mN}}{g_{mP}} = -\sqrt{\frac{\mu_n (W/L)_n}{\mu_p (W/L)_p}}$$

- $A_V \uparrow$ => $(W/L)_p \downarrow$ =>for given bias current, $|V_{GS} - V_{THP}| \uparrow$, output CM level $\downarrow$
- Be similar with CS stage, providing good linearity
- Consume voltage headroom and create trade-off between output voltage swing, input CM range and gain
  -- $V_{X,Y}(max)=V_{DD} - |V_{TH3,4}|$

Example If A_V=10, μ_n=2μ_p, => $(W/L)_n$=50$(W/L)_p$

The area of NMOS is bigger.

High gain by adding PMOS current sources

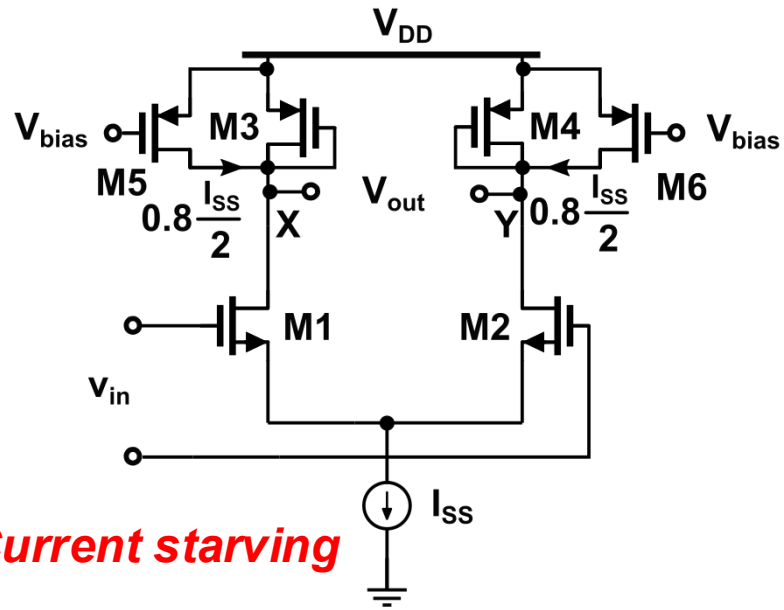

$$A_V = -\frac{g_{mn}}{g_{mp}} = -\sqrt{\frac{\mu_n \left(W/L\right)_n}{\frac{1}{5}\mu_p \left(W/L\right)_p}}$$

$$= -\sqrt{5}\sqrt{\frac{\mu_n \left(W/L\right)_n}{\mu_p \left(W/L\right)_p}}$$

Current starving

- auxiliary PMOS current sources: M_5 and M_6
- g_m of M_3 and M_4 is lowered by reducing their current instead of $(W/L)_P$

  For $I_{D5} = I_{D6} = 0.8I_{D1} = 0.8I_{D2}$, I_{D3} and I_{D4} are reduced by a factor of 5
- For a given overdrive, g_{mP} is lowered by the same factor
- Differential gain is $\sqrt{5}$ times (if $\lambda = 0$)

Outline

- Single-Ended and Differential Ended
- Basic Differential Pair
- Common-Mode Response
- Differential Pair with MOS Loads
- Differential Pair with Active Current Mirrors

Current Source Load

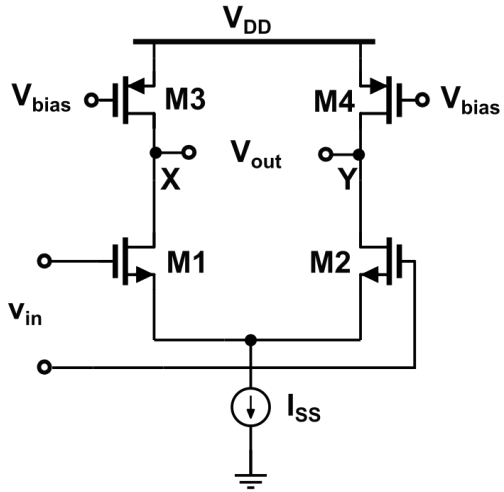

$$R_D = \left(r_{op} // r_{on}\right)$$

$$A_V = -g_{mn}\left(r_{op} // r_{on}\right)$$

- Higher gain
- Larger output swing
- More stabilizable common-mode output is required

Cascode Differential Pair

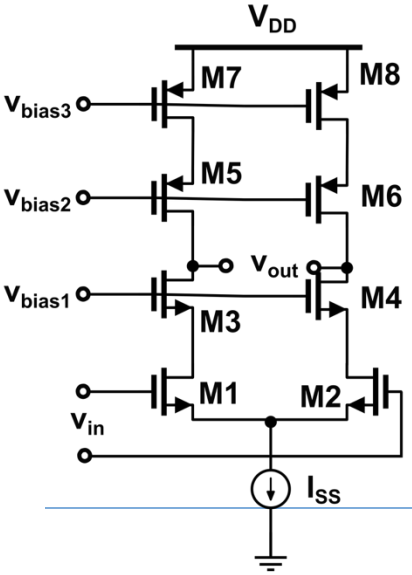

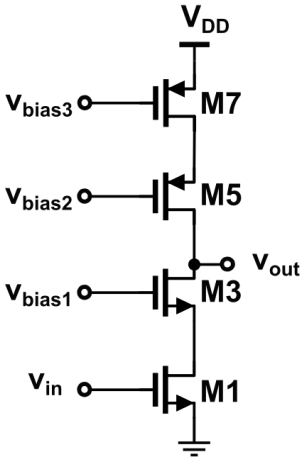

$$R_D = \left(g_{m5}r_{O5}r_{O7}\right) // \left(g_{m3}r_{O3}r_{O1}\right)$$

$$A_v = -g_{m1}\left[\left(g_{m3}r_{O3}r_{O1}\right) // \left(g_{m5}r_{O5}r_{O7}\right)\right]$$

Operational Transconductance Amplifier (OTA)

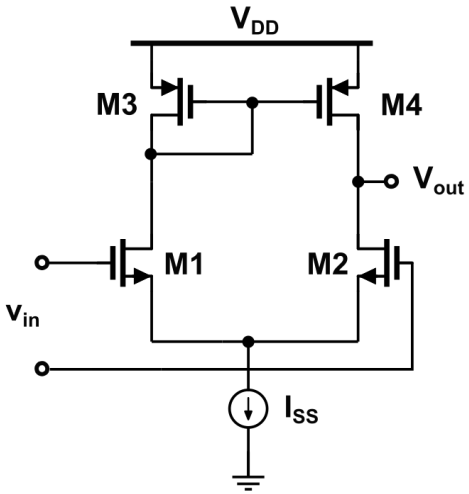

- **Five-transistor OTA**
- Differential input, single-ended output

When $V_{in}\uparrow$, M_1: $\Delta I\uparrow$, M_2: $\Delta I\downarrow$

$\because I_{D4}=I_{D3}=I_{D1}$, $\therefore M_4$: $\Delta I\uparrow$

$I_{out}=I_{D4}-I_{D2}=I_{D1}-I_{D2}$, $\Rightarrow \Delta I_{out}=2\Delta I$

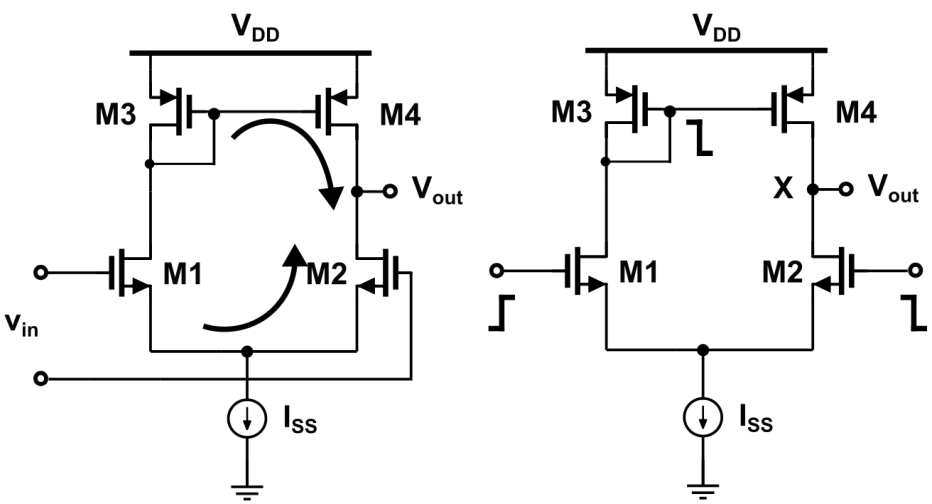

- V_{out} rises by 2 mechanisms:
  - M_2: draw less current from X to GND
  - M_4: push a greater current from V_{DD} to X

Large-Signal Analysis

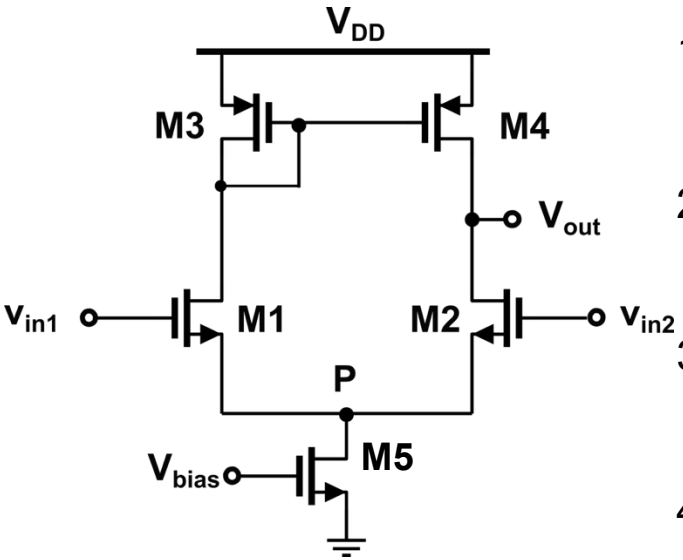

1) When $V_{in1} << V_{in2}$, $V_{out} = 0$

M_1, M_3: off $I_{D3}=0$ & M_4: off

M_2, M_5: deep triode region

2) When V_{in1} close to V_{in2}

M_1, M_3, M_4: on

V_{out}: depended on I_{D4}-I_{D2}

3)When $V_{in1} \approx V_{in2}$,

M_2, M_4: saturation region

High gain region

4) When $V_{in1} >> V_{in2}$, I_{D1}, I_{D3}, I_{D4} ↑↑

M_2: off or I_{D2}: very small

M_4: deep triode region=>$I_{D4}=0$ =>$V_{out} = V_{DD}$

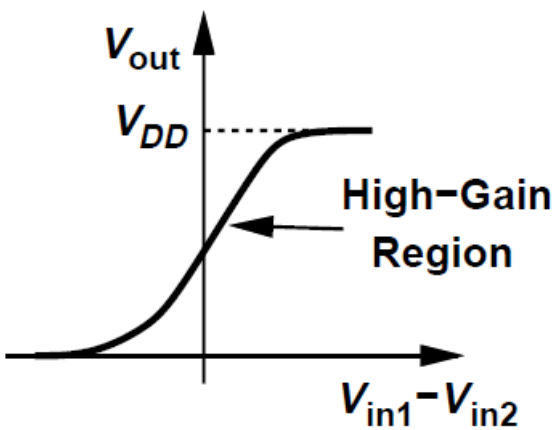

The minimum value of input common-mode:

$$\boldsymbol{V_{in,CM}(min) > V_{GS} + V_{on5}}$$

M2 in saturation: $V_{out} > V_{in,CM} - V_{TH2}$

When $V_{in1} => V_{in2}$, $V_{out} > V_{DD} - |V_{GS3}|$

or $V_{out} > V_{DD} - |V_{DS4}|$

Small-Signal Analysis

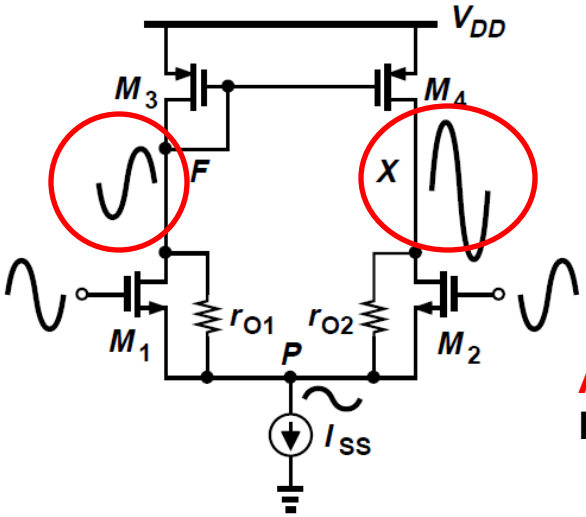

- With small differential inputs, the voltage swings of V_F and V_X are vastly different.
- The effects of V_F and V_X at node P (through r_{O1} and r_{O2}, respectively) do not cancel each other and node P cannot be considered a virtual ground.

$$A_V = -G_m R_{out}$$

Approximate Analysis:

Node P can be approximated by a virtual ground

- The impedance at node F is relative low and its swing small
- The current returning form F to P through r_{o1} is negligible

Transconductor

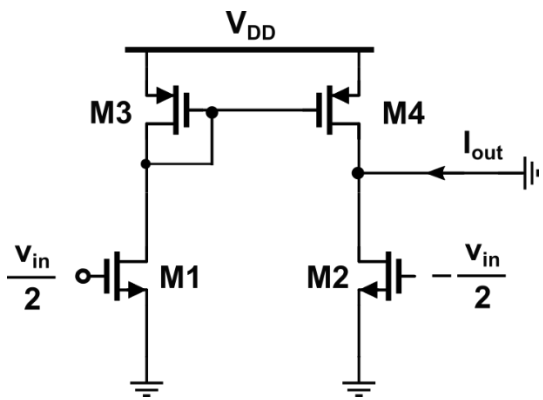

$$I_{D4} = |I_{D3}| = |I_{D3}| = g_{m1,2} V_{in}/2$$

$$I_{D2} = -g_{m1,2} V_{in}/2$$

$$I_{out} = I_{D4} - I_{D2} = -g_{m1,2} V_{in}$$

$$\boxed{|G_m| = g_{m1,2}}$$

Output Resistance R_{out}

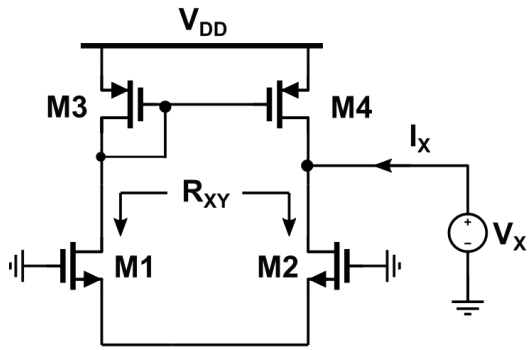

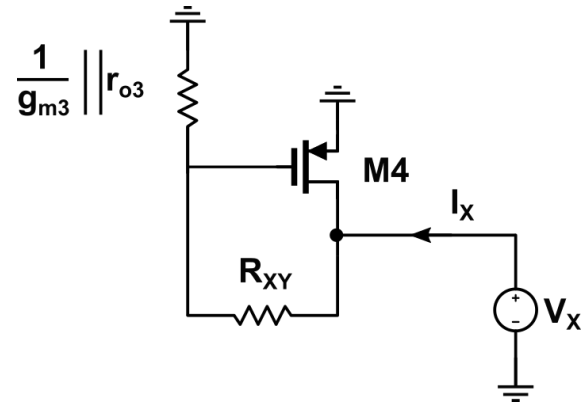

- Any current flowing into M1 must flow out of M_2, and the role of the two transistors can be represented by a resistor $R_{XY} \approx 2r_{O1,2}$
- The current drawn from V_X by R_{XY} is mirrored by M_3 onto M_4 with unity gain.
- For $I_X = 2\dfrac{V_X}{2r_{O1,2} + \dfrac{1}{g_{m3}} // r_{O3}} + \dfrac{V_X}{r_{O4}}$ $\quad 2r_{O1,2} >> \dfrac{1}{g_{m3}} // r_{O3}$

$$R_{out} \approx r_{O2} // r_{O4}$$

$$A_V = -G_m R_{out} = -g_{m1,2}\left(r_{O2} // r_{O4}\right)$$

Extract Analysis

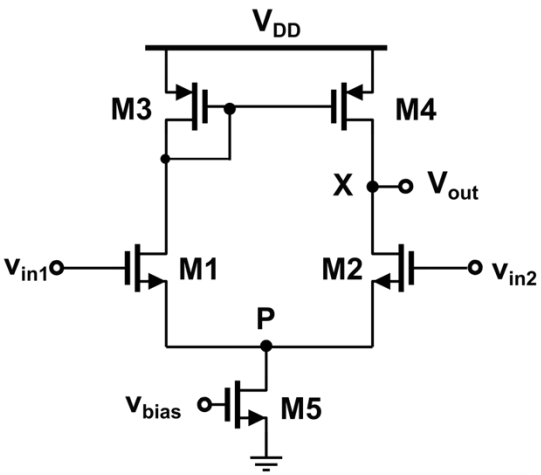

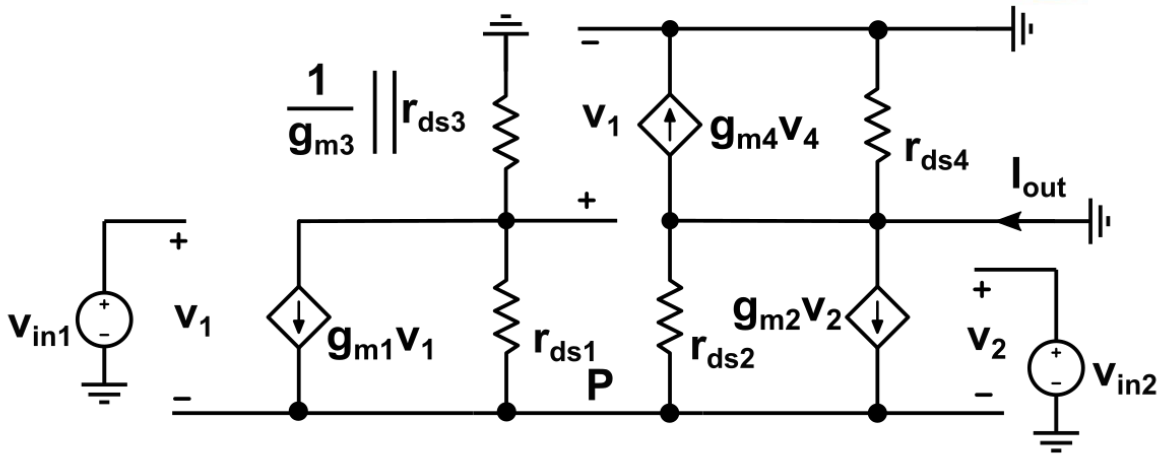

$$G_m R_{out} = -g_m r_{O1} r_{O4} \frac{2g_{m3}r_{O3} + 1}{\left(2g_{m3}r_{O3} + 1\right) r_{O4} + 2r_{O1}\left(1 + g_{m3}r_{O3}\right) + r_{O3}} = -\frac{g_m r_{O1} r_{O4}}{r_{O1} + r_{O3}} \frac{2g_{m3}r_{O3} + 1}{2\left(g_{m3}r_{O3} + 1\right)}$$

$$\left|A_V\right| = g_{m1}\left(r_{O1}//r_{O4}\right) \frac{2g_{m4}r_{O4} + 1}{2\left(g_{m4}r_{O4} + 1\right)} \approx g_{m1}\left(r_{O1}//r_{O4}\right)$$

- We can view this result as our approximate solution, $g_{m1}\left(r_{O1}//r_{O4}\right)$ multiplied by a “correction” factor that is less than unity.

Example

Sketch the large-signal input-output characteristic of **the unity-gain buffer** if the op amp is realized as a five-transistor OTA.

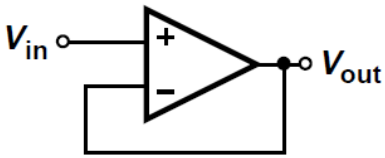

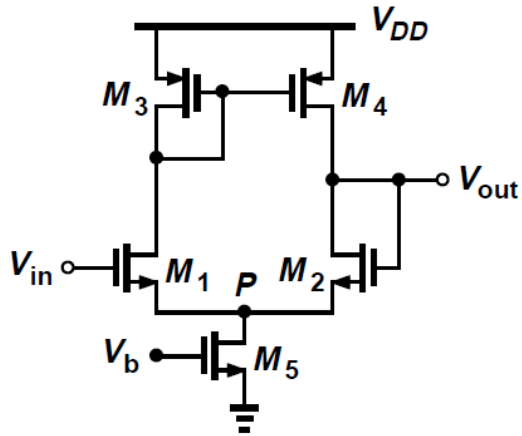

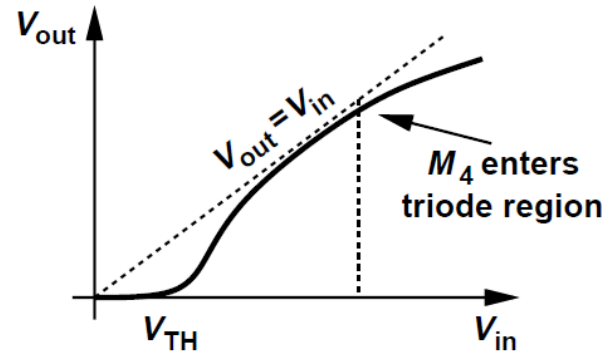

- V_{in} = 0: M1, M3 and M4 are off, M5 enters the triode region
  - $V_{out} = V_P = 0$
- As Vin rises, $V_{out} \approx V_{in}$.
  - This unity-gain action continues as Vin increases.
- For a sufficiently high Vin:
  - M1 and M4: in the triode region.

Common-mode Properties

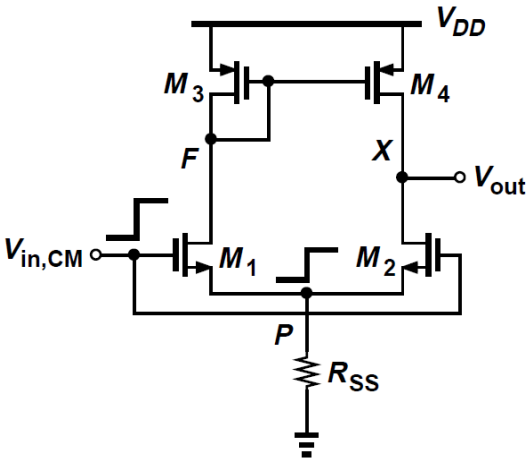

symmetry

$V_{out}=V_F$

$$A_{CM} = \frac{\Delta V_{out}}{\Delta V_{in,CM}}$$

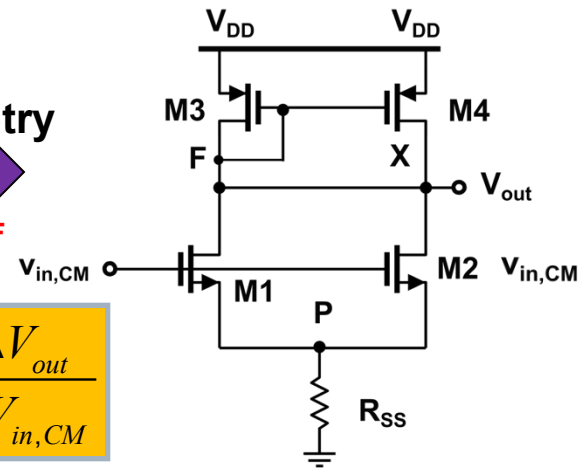

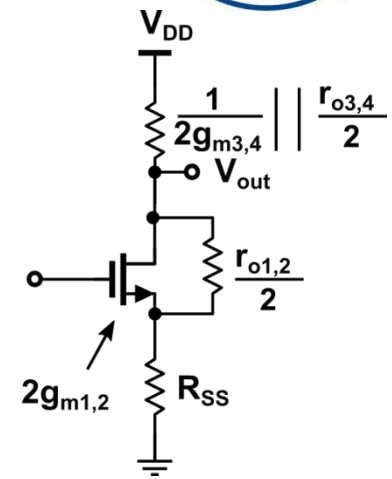

$$R_D = \frac{1}{g_{m3}} // \frac{1}{g_{m4}} // r_{o3} // r_{o4} = \frac{1}{2g_{m3}} // \frac{r_{o3}}{2} \approx \frac{1}{2g_{m3}}$$

I_{SS} with output impedance R_{SS}

$$A_{CM} \approx \frac{-\frac{1}{2g_{m3,4}} // \frac{R_{O3,4}}{2}}{\frac{1}{2g_{m1,2}} + R_{SS}} = \frac{-1}{1+2g_{m1,2}R_{SS}} \frac{g_{m1,2}}{g_{m3,4}}$$

$$CMRR = \left|\frac{A_{DM}}{A_{CM}}\right|$$

~$(g_m r_O)^2$ if $R_{SS}=r_O$

$$= g_{m1,2}\left(r_{O1,2}//r_{O3,4}\right)\frac{g_{m3,4}\left(1+2g_{m1,2}R_{SS}\right)}{g_{m1,2}}$$

$$= \left(1+2g_{m1,2}R_{SS}\right) g_{m3,4}\left(r_{O1,2}//r_{O3,4}\right)$$

- Even with perfect symmetry, the output signal is corrupted by input CM variations.

集成电路原理与设计
差分放大器

谭志超
zhichaotan@zju.edu.cn